SKF Electronic Steering Input Unit

ADD-6203

Product description

The SKF Electronic Steering Input Unit is a mechatronic solution with integrated Electronic Control Unit (ECU), embedded software and CAN bus interface, which can replace the traditional steering column offering a robust steering input function to be fitted in both electro-hydraulic and electro-mechanic steer-by-wire systems.

The solution translates the steering wheel's rotational movement into safe digital information on the CAN bus, offering a resistive steering feedback with redundant control.

Engineered to withstand severe operating conditions and tested to fulfill the severe steering input requirements for marine and off-highway segments, these units have passed an extensive set of mechanical, environmental and electrical tests. The SKF Electronic Steering Input Unit proved to be resistant to a wide temperature range, chemicals, dirt, dust, water, shocks, vibrations and other demanding operating conditions, resulting in improved reliability.

The SKF Electronic Steering Input Unit opens new possibilities to improve steering system performance, in particular better steering feel and lower power consumption.

The unit provides a flexible, light-weight and compact solution with smart functions for drivers' comfort such as programmable endstops and controllable resistive steering feedback.

Moreover the steering feedback can be dynamically adapted to different driving conditions. For example, the steering wheel "resistance" can be controlled proportionally to the steering wheel turning speed: this enables more accurate, comfortable and safe steering.

Features

- Redundant position signal for steering wheel
- Controllable resistive steering feedback with redundant command
- Compact design
- Contactless sensors

Customer benefits

- Enables more ergonomic vehicle interior design
- Enables more accurate, comfortable and safe steering for better vehicle maneuverability
- Integrated and virtually maintenance free technology reduces cost of ownership

Product dimensions and interfaces

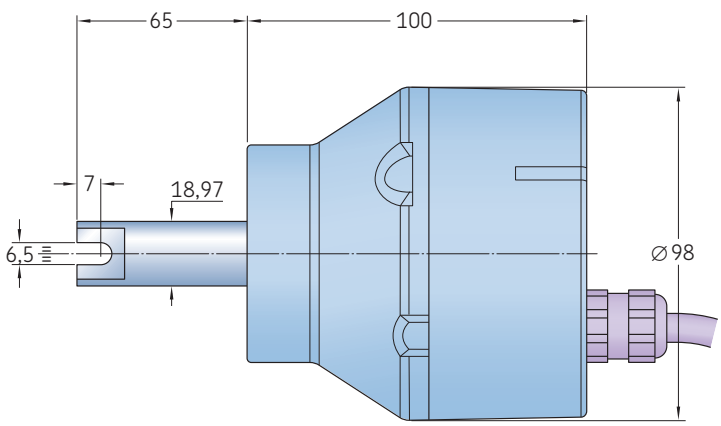

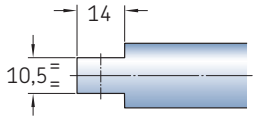

Vehicle and steering wheel interface

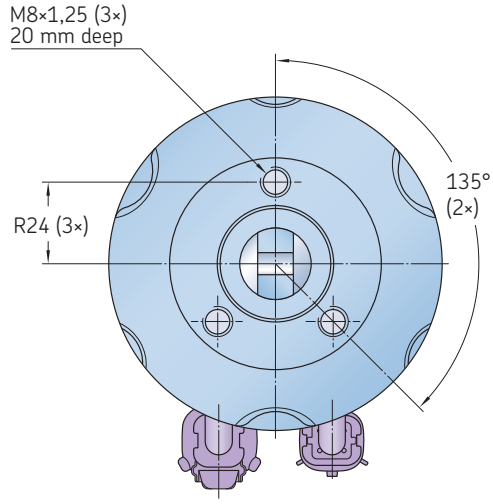

Vehicle interface

Performances

Mechanical specifications

Weight	Resistive feedback torque	Max static axial force	Max tilting moment	Max steering speed
kg	Nm	N	Nm	r/min
1,8	0,3 – 12	1 500	100	180

Enviromental Specification

Ambient operating temperature		Storage temperature		Humidity		Protection level	Salt spray corrosion resistance	Random vibration (rms)
Nom.	Range	Nom.	Range	Nom.	Range		Nom.	Nom.
°C		°C		%		–	h	g
25	–40 to +85	25	–40 to +85	–	0 to 95	IP67	300	7,5

Electronics specifications

Operating parameters

Supply voltage			Supply current		Supply current brake (max torque)	
Nom.	Min.	Max.	Nom.	Max.	Nom.	Max.
V			mA		mA	
12 /24	10	36	80	120	980	1 100

Signal parameter

Measuring Range	Sensor Accuracy	Sensor Resolution	Sensor Repeatability
Nom.	Nom.	Nom.	Nom.
degree	degree	bit	degree
Absolute multi-turn[1)]	± 2	12 / 14 (configurable)	± 0,2

[1)] referred to a "zero" externally set at power on

CAN Interface

CAN- Bus version	CAN- Bus ID format	CAN- Bus speed	CAN- transceiver
–	bit	kbps	–
2.0B	29 (11 configurable)	250 (different speed configurable)	High speed standard

Pin out

Connections

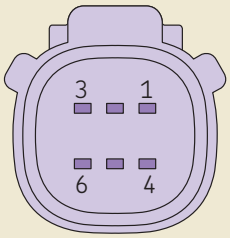

Primary connector

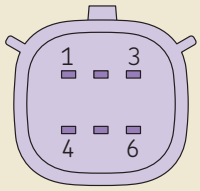

Secondary connector

Primary connector

Pin	Function
1	Primary CAN_L
2	Primary CAN_H
3	Not connected
4	Power
5	Ground
6	Not connected

Secondary connector

Pin	Function
1	Not connected
2	Secondary CAN_H
3	Secondary CAN_L
4	Not connected
5	Ground
6	Power

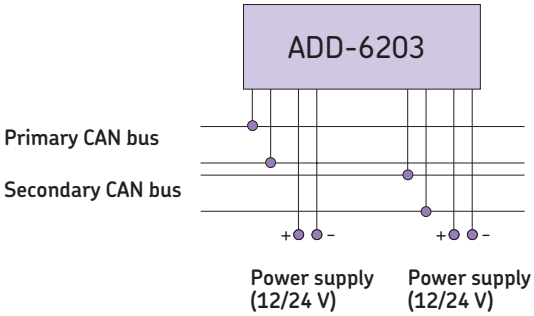

Connection scheme

Electromagnetic compatibility

- Over voltage and reverse polarity protection on power lines.
- Short circuit protection (to ground, to voltage battery) on all lines.
- Immunity to Power Transient Pulses as per ISO 7637 (Pulse 1, 2a, 2b, 3a, 3b, 4, 5).
- Immunity to RF E-field up to 80 V/m (EN 61000 - 4 - 3).
- Immunity to bulk current injection up to 200 mA (ISO 11452).
- Immunity to Conducted Disturbances up to 30 V (EN 61000 - 4 - 6).
- Immunity to ESD up to ±15 kV in air, ±8 kV on housing and connector's pin (EN 61000 - 4 - 2 and ISO 10605).
- Conducted and radiated emissions meet CISPR 25 Class 3.
- Radiated emissions compliant with ISO 14982.
- Compliant to generic emission and immunity standards EN 61000 - 6 - 2 and EN 61000 - 6 - 4.

Options

- CAN Bus embedded terminating resistor
- Customizable shaft interface to the steering wheel
- Customizable electrical wires lenght and connectors

PUB MT/P8 11048/2 EN · May 2014