**Customer reference case**

Off-road vehicles

Compact unit in steering system

SKF Electronic Steering Input Unit

# Hamm's award winning DV-series road roller uses SKF steer-by-wire unit

*The DV-series is one of Hamm's road roller family. The seat and cabin of these new road rollers can be moved from side to side to position the operator so that he has an unobstructed view of the drum's edge. To enable free movement of the cabin and steering mechanism, Hamm equipped these vehicles with a steer by wire system that uses an SKF steering input unit. The unique design gives the operator a choice of using a conventional steering wheel or a joystick as the input device for their steer by wire system.*

**Features**
- ✓ Compact design
- ✓ Passive feedback
- ✓ Sensor diagnostic
- ✓ CAN-Bus
- ✓ Customisable output shaft interface
- ✓ Customisable wiring harness interface

**Customer benefits**
- ✓ Enables ergonomic cabin designs
- ✓ Improves steering feel
- ✓ Built-in safety features
- ✓ Easy installation

In the road construction business, the key to a quality job falls in large part on the road roller and the operator. Proper speed, combined with precision steering, are two key elements that cannot be left to chance. To enable the operator to steer more accurately, without fatigue, Hamm developed the DV-series of road rollers. The unique design of these road rollers enable the operator's seat and steering wheel to move so that the operator does not have to stand or lean to the side to see where he is going. To make this unique feature a reality, the steering system plays a critical role. Hamm's objective was to find a unit that would meet their high standards for product quality and support. Together with SKF, they selected the ADD series, out of the range of SKF steering input units.

The SKF ADD series steering input unit with CAN-Bus fulfilled Hamm's requirements. This steering unit can be programmed to provide passive steering feedback to the operator. Passive feedback dynamically changes steering resistance if the operator is steering too fast. This enables the operator to steer more accurately especially in instances where the road meets the curb.

Hamm, like other steer-by-wire proponents, sees the design freedom that results from the elimination of hydraulic hoses as a key benefit of a steer-by-wire system. The system also eliminates the heat and noise that accompanies hydraulics. Ergonomic benefits were also important as it reduces operator fatigue and enables increased productivity.

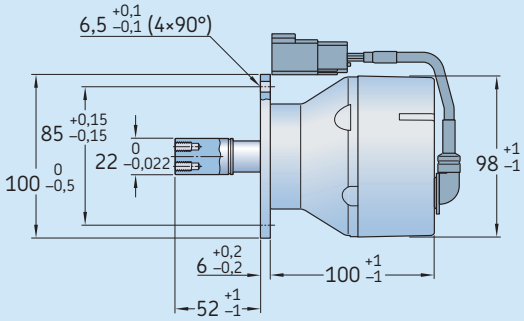


**SKF Electronic Steering Input Unit**

| Weight | Brake Torque | Rotational speed | Power supply | Specifications Electronic | | Protection level | Designation |
|---|---|---|---|---|---|---|---|
| | | | | Resolution | Interface | | |
| kg | Nm | r/min | V | bit | CAN | – | – |
| **1,8** | 0.3-12 | up to 150 | 12/24 | 12 | 2,0 B | IP67 | **ADD-6204** |

Ask your local SKF representative for detailed specifications

® SKF is a registered trademark of the SKF Group.

™ SKF Explorer is a trademark of the SKF Group.

© SKF Group 2012
The contents of this publication are the copyright of the publisher and may not be reproduced (even extracts) unless prior written permission is granted. Every care has been taken to ensure the accuracy of the information contained in this publication but no liability can be accepted for any loss or damage whether direct, indirect or consequential arising out of the use of the information contained herein.

**PUB 06421/1 EN** • December 2012