NT 04007
VKMA 04108

Ford

VKMA 04108

A

(4): Ford 21-104 (No. 303-193)
(5): Ford 21-168 (No. 303-393)
(6): Ford 21-162B (303-376)
(8): Ford 15-030A (205-072)
(10): Ford 21-229 (303-651)

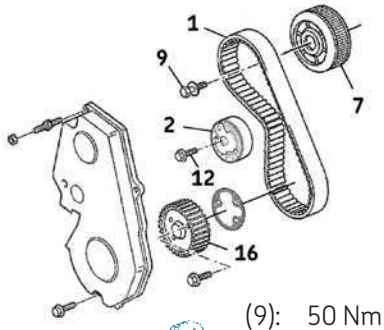

(9): 50 Nm
(12): 50 Nm
(15): 24 Nm

B

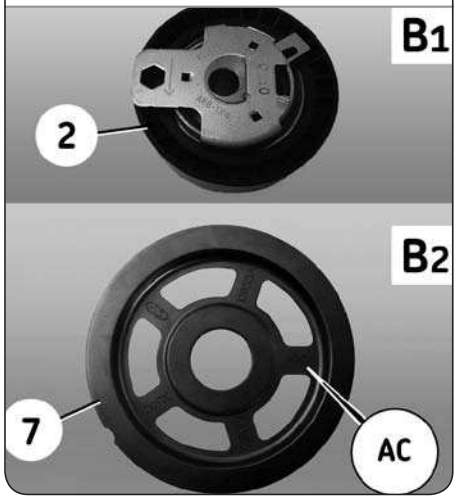

C

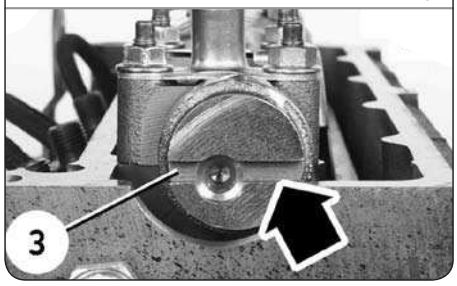

Removal

1) Disconnecting the battery according to the vehicle manufacturing guidelines.
2) Prepare the vehicle for the timing replacement according to the vehicle manufacturing guidelines.
3) Turn the crankshaft clockwise and stop just before the TDC of cylinder No. 1. Check that the slot (**3**) on the camshaft is parallel to the edge of the cylinder head (**Fig. C**).
4) Remove the engine block cap (**15**) and insert the timing pin (**4**) into the engine block (**Fig. D**).
5) Turn the crankshaft clockwise slowly until it stops on the pin (**4**) (**Fig D**).
6) Fit the flywheel locking tool (**5**) (**Fig. E**).
7) Fit the camshaft timing tool (**6**) (**Fig. F**).
8) Loosen the tensioner roller fastening bolt (**12**) and turn the adjustment dial (**11**) clockwise using an Allen key (**Fig. I1**) to loosen the timing belt (**1**). Remove the timing belt.
9) Remove the tensioner roller (**2**).

Removing the camshaft sprocket

Note: the following removal operations must be carried out if the camshaft sprocket (**7**) mounted on the engine is not marked "AC" (**Fig. B2**). If the camshaft sprocketit is marked with "AC", move directly onto step **10**).

– Block the camshaft sprocket (**7**) using the tool (**8**) then slacken and remove the fastening bolt (**9**) (**Fig. G**).
– Remove the sprocket without "AC" using the puller (**10**) (**Fig. H**).

10) Block the camshaft sprocket (**7**) using the tool (**8**) then slacken the fastening bolt (**9**) (**Fig. G**).
11) Separate the camshaft sprocket (**7**) from its axis using the puller (**10**) (**Fig. H**).
12) Check that the camshaft sprocket can turn freely along its axis.

D

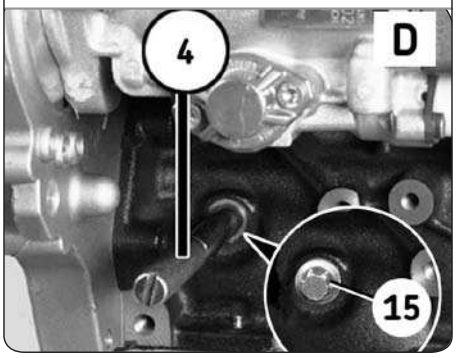

E

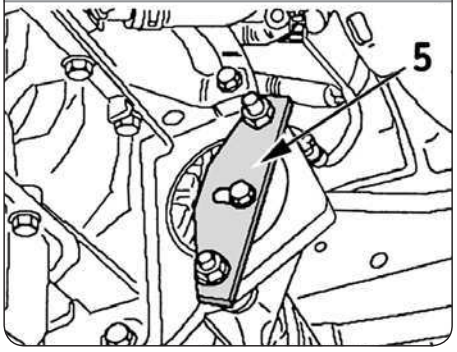

Refitting

Caution! First clean thoroughly the bearing surfaces of the rollers.

Fitting the "AC" camshaft sprocket

Note: The following refit operations must be carried out if the used camshaft sprocket (**not marked with "AC"**) was removed earlier. If this is not the case, move directly onto step **13**).

– Fit the new camshaft sprocket (it must be marked "AC" (**Fig. B2**)).
– Slightly tighten the fastening bolt (**9**) without locking it (**Fig. G**).
– Check that the camshaft sprocket can turn freely along its axis.

Install Confidence

VKN 1006

F

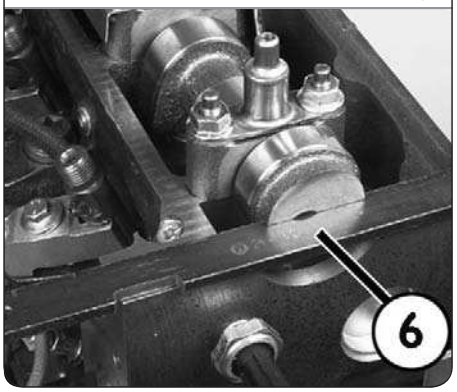

G

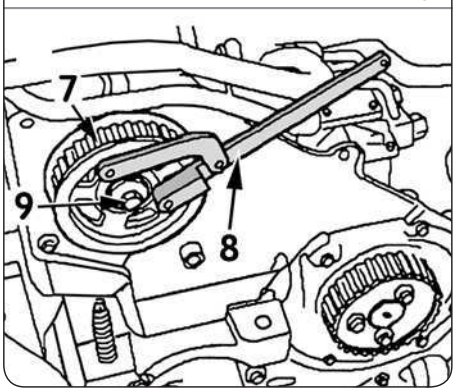

H

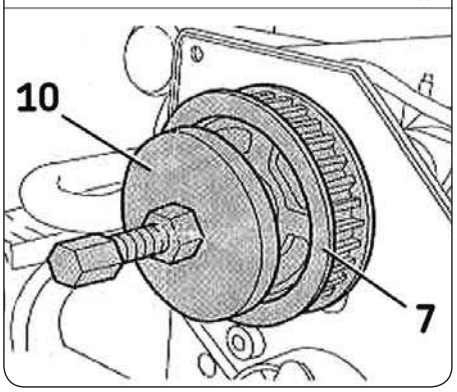

13) Check that the timing tools are in place: pin (**4**) (**Fig. D**), tool (**5**) (**Fig. E**) and tool (**6**) (**Fig. F**).
14) Fit the new tensioner roller (**2**).

Note: Fit the automatic tensioner roller (**Fig. B1**).

15) Using the Allen key set the adjustment dial (**11**) of the tensioner roller to the "3 o'clock" position (**Fig. I1**). Lightly tighten the tensioner roller fastening bolt (**12**).
16) Fit the new timing belt (**1**), starting with the injection pump sprocket.
17) Tighten the timing belt (**1**): Turn the adjustment dial (**11**) on the tensioner roller **anticlockwise** using an Allen key until the moving pointer (**13**) is located in the centre of the notch (**14**)
(**Fig. I2**).
18) Tighten the tensioner roller fastening bolt (12) to **50 Nm**. (**Fig.J**)
19) Block the camshaft sprocket (**7**) using the tool (8) then tighten the fastening bolt (**9**) to **50 Nm** (**Fig. G**).
20) Remove all the timing tools.
21) Turn the crankshaft 6 times clockwise up to just before the TDC of cylinder No. 1 the TDC of cylinder No. 1. Insert the timing pin (**4**) in the engine block (**Fig. D**). Turn the crankshaft clockwise slowly until it stops onthe pin.
22) Fit the flywheel locking tool (**5**) (**Fig. E**).
23) Check ilf the timing marks are not aligned (**fig. I2**) or the camshaft timing gauge (**6**) (**Fig.F**) does not engage easily in the groove (**3**) (**Fig.C**), remove the timing belt and return to step **16**).

I

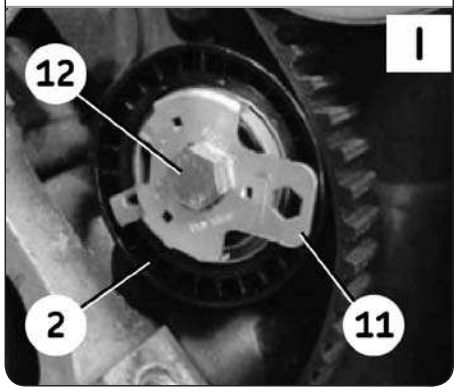

J

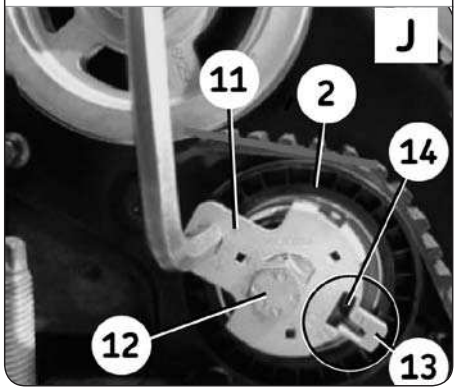

24) Remove all the timing tools. Refit the cap (**15**) on the engine block, tightening it to a torque of **24 Nm**.
25) Replace the cylinder head cover.
26) On Ford Focus: if necessary, using a file reduce the thickness of the interior angle (see black arrow) on the timing casing (**16**) by around 0.5 mm (**Fig. K**).
27) Refit the removed elements in reverse order to removal.

K

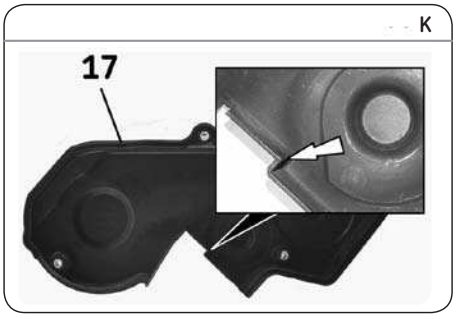

Notice: Always follow the vehicle manufacturer instructions when working on the engine. The SKF KITS are designed for the automotive repair professional and must be fitted using tooling used by these professionals. These instructions are to be used as a guideline only. This document is the exclusive property of SKF. Any representation, partial or full reproduction, is forbidden without prior written consent from SKF.

® SKF is a registered trademark of the SKF Group.

© SKF Group 2014
The contents of this publication are the copyright of the publisher and may not be reproduced (even extracts) unless prior written permission is granted. Every care has been taken to ensure the accuracy of the information contained in this publication but no liability can be accepted for any loss or damage whether direct, indirect or consequential arising out of the use of the information contained herein. Any cost savings and revenue increases in this publication are based on results experienced by SKF customers and do not constitute a guarantee that any future results will be the same.

PUB 80/I1 15002 EN · September 2014