LUBRILEAN® VarioPlus

Minimal Quantity Lubrication System for Internal Lubrication

Operating Manual
Version 2

1 Contents

2 Information Concerning the EC Declaration of Conformity and the Manufacturer´s Declaration ... 4

3 Notes Concerning this Manual ... 5

4 Applications ... 5

5 Safety Instructions ... 6
- 5.1 Application of the MQL System ... 6
- 5.2 Personnel ... 7
- 5.3 Working on the MQL System ... 7
- 5.4 Lubricants ... 7

6 Transport, Delivery, Storage ... 8

7 Lubricants ... 8

8 Design and Function ... 10
- 8.1 Principle of Minimal Quantity Lubrication (MQL) ... 10
- 8.2 Active Principle of Aerosol ... 10
- 8.3 System Design ... 12
- 8.4 Optical Level Indicator ... 12
- 8.5 Electrical Level Indicator ... 12
- 8.6 Display and Setting of the Lubricant Flow Amount ... 12
- 8.7 Control of the Internal Container Pressure ... 13

9 Installation ... 13
- 9.1 Connection of Aerosol Outlets ... 13
- 9.2 Rotary Transmission Leadthrough and Spindle ... 15
- 9.3 Compressed Air Connection ... 15
- 9.4 Electrical Connection ... 15

10 Parameter Setting ... 16
- 10.1 General Information ... 16
- 10.2 Effects of Inlet Pressure ... 16
- 10.3 Parameter Setting Procedure ... 16

11 First Operation ... 18

12 Maintenance ... 18
- 12.1 Re-Filling Lubricant ... 18
- 12.2 Changing Lubricant ... 19
- 12.3 Draining Lubricant ... 19
- 12.4 Cleaning ... 19

13 Failures ... 21

14 Decommissioning ... 23
- 14.1 Temporary Shut-Down ... 23
- 14.2 Final Shut-Down ... 23

15 Service ... 23

16 Technical Data ... 24

2 Information Concerning the EC Declaration of Conformity and the Manufacturer's Declaration

For the following specified product:

LUBRILEAN® VarioPlus

we herewith certify that it conforms to the pertinent safety requirements set forth in the following Council Directive(s) for the harmonisation of the laws of the Member States...

- **Electromagnetic compatibility 89/336/EEC**

Notes

(a) This declaration certifies the conformity with the directives listed, but does not entail an express assurance of properties.
(b) The safety instructions in the documentation accompanying the product must be observed.
(c) Commissioning of the certified product is prohibited until it is ensured that the machine, vehicle or the like into which it is (they are) to be incorporated has (have) been declared in conformity with the provisions of the applicable directives.
(d) The operation of the products on non-standard line voltage as well as non-adherence to the installation instructions may affect the EMC properties and electrical safety.

We further declare that the above mentioned product:

is meant for integration into a machine / for connection to other machinery according to the **EC - Machinery Directive 98/37/EC, Annex II B**. Taking into service is not admissible until evidence has been provided that the machine in which this part is installed or to which this part is connected, conforms to the regulations set forth in the EC directive 98/37/EC.

with reference to the **EC directive 97/23/EC concerning apparatus subjected to pressure** this product must only be used as intended and according to the notes in the documentation. Especially observe the following:

SKF products must not be used in conjunction with fluids, group I (hazardous fluids), according to the definition of article 2 paragraph 2 of the Directive 67/548/EEC dtd. 27th June, 1967; and are not approved for application with such.

None of the products manufactured by SKF are approved for application in connection with gases, liquefied gases, gases dissolved under pressure, steams or fluids that will reach a steam pressure of more than 0.5 bar above the normal atmospheric pressure (1013 mbar) in the admissible application temperature range.

When used as intended, the products supplied by us do not reach the limit values listed in the Article 3 par. 1, sections 1.1 to 1.3 and par. 2 of the Directive 97/23/EC. Therefore they do not come under the requirements set forth in annex I of that directive. They are not labelled with the CE mark with reference to the directive 97/23/EC. They are classified by us to come under Article 3 par. 3 of the directive.

SKF products must only be used as intended. Use or commissioning of the products in hazardous areas with gas or dust atmosphere is prohibited.

If required, you may request the declaration of conformity or manufacturer's declaration for this product from our central contact address.

3 Notes Concerning this Manual

The SKF minimal quantity lubrication system LUBRILEAN® VarioPlus is designed in accordance with the generally approved technological rules and complies with the applicable occupational safety and accident prevention regulations. Still hazards may be involved in their use, which can lead to injury of operators or other persons or damage to the machine or other property. To ensure trouble-free operation and prevent hazard, we kindly ask you to read the present manual carefully and observe the notes contained in it.

Use the table of contents to locate the desired information promptly and successfully.

Please take note of the symbol shown below. It calls attention to special situations:

Text marked with this sign alerts to special hazards or work that must be performed with caution.

Please consider that this manual is an integral part of the device and should be handed to the new owner if the device is sold.

4 Applications

All products of SKF LUBRICATION SYSTEMS GERMANY AG may be used only as intended and according to the information set forth in the respective operating manual.

We expressly emphasize that dangerous materials of any type, especially materials which are classified as dangerous according to EC directive 67/548/EEC article 2, paragraph 2, may be stored and transported and/or distributed with SKF central lubrication systems and components only after consulting SKF Lubrication Systems Germany AG and receiving their written consent.

None of the products manufactured by SKF are approved for application in connection with hot gases, liquefied gases, pressurized gases, steams or fluids that will reach a steam pressure of more than 0.5 bar above the normal atmospheric pressure (1013 mbar) in the admissible application temperature range.

Except for specially designated products, products manufactured by SKF are not approved for application in hazardous areas.

The SKF minimal quantity lubrication system LUBRILEAN® VarioPlus, in short MQL system, was designed for the internal lubrication of cutting tools for metal-cutting processing. Internal lubrication refers to the direct supply of lubricant to the friction point between the tool blade and the workpiece via the tool spindle or the turret and tool.

Other use or use beyond this purpose is considered unintended. SKF will not accept liability for damages resulting from such unintended use.

If you wish to employ the MQL system LUBRILEAN® VarioPlus also for exterior lubrication, please consult us beforehand.

The SKF MQL system LUBRILEAN® VarioPlus can be employed both for the initial equipping of machine tools and for the retrofitting of machine tools with an available cooling lubricant supply. Thanks to the internal lubrication principle, the system is also suitable for connection to tools with very small cooling duct diameters. Consultation with SKF is necessary.

For internal lubrication, only rotary transmission leadthroughs designed for dry runs may be used.

For lubricating purposes you should use only the minimal quantity lubricants we offer, which were specially developed for such use.

Only lubricants approved for the MQL system may be fed. Unsuitable lubricants may result in a failure of the lubrication system and in severe material damage or personal injuries.

Further information concerning the lubricants are found in the Chapter “Lubricants”, page 8.

SKF will not accept liability for damage arising from the use of lubricants other than those approved by SKF in writing regarding device compatibility and feedability.

5 Safety Instructions

Please observe the following safety instructions to ensure for a trouble-free operation of the MQL system and avoid damage.

5.1 Application of the MQL System

The MQL system LUBRILEAN® VarioPlus may only be operated in a technically flawless condition in accordance with the intended use and with due regard to safety and hazards and considering the operating manual and the local safety regulations.

The area of the spray jet and rooms where the aerosol concentration exceeds the explosion limit have to be kept clear of any type of fire, e.g. in the form of open flames, sparks, lit cigarettes, etc.. The aerosol must not be sprayed onto hot surfaces.

The processing rooms which are filled with aerosol have to be equipped with an extraction system featuring a respective filter technology in dependence of the applied lubricant.

In fault cases, the MQL system LUBRILEAN® VarioPlus has to be isolated from the compressed air supply as soon as possible, e.g. by operating the quick-release coupling at the compressed air connection if this does not imply a further hazard.

Especially errors that could affect safety must be resolved without delay. Please contact a SKF service centre.

The safety mechanisms, if provided for, must not be damaged, dismantled, or in any way made inoperable, nor must they be replaced by parts which have not been expressly approved by SKF.

Arbitrary re-construction of the MQL system as well as the use of unapproved spare parts and auxiliary devices are prohibited and result in an expiration of the warranty.

Disused MQL systems have to be disabled and then properly disposed of.

5.2 Personnel

The installation, electrical connection and all interventions such as repairs, component replacement, etc. may be carried out only by adequately qualified and instructed personnel.

An improperly connected MQL system may bear the risk of considerable material damage and personal injuries.

Qualified personnel has been trained, instructed and specifically ordered by the owner to perform the work. Due to their training and experience, these persons are familiar with the applicable standards, regulations, accident prevention rules and operating conditions. They are authorised to perform the respective tasks and capable of identifying and avoiding possible hazards. The definition for qualified personnel and the prohibition of the employment of non-qualified personnel are stipulated by DIN VDE 0105 or IEC 364.

5.3 Working on the MQL System

CAUTION DANGER TO LIFE
Repair works may only be carried out at the MQL after the system has been deenergised by respectively qualified personnel.

CAUTION DANGER TO LIFE
Works on MQL systems which have not been deenergised may result in personal injuries.

Working on systems under pressure can lead to personal injury.

Prior to carrying out any works at the MQL, the system has to be isolated from the electrical power and the compressed air supply.

It is imperative to adhere to the generally applicable provisions and safety regulations for working on machines with compressed air supply.

5.4 Lubricants

Spraying lubricants other than those approved of by SKF or with SKF minimal quantity lubrication systems is prohibited.

Do not spray people or animals with aerosol. The aerosol must not get in contact with the eyes and must in no case be inhaled.

We point out that the spraying of lubricants or lubricant-containing substances may bear the risk of health hazards.

An uncontrolled spraying of lubricants or lubricant-containing substances may form lubricant-air-mixtures with possibly explosive concentrations.

6 Transport, Delivery, Storage

The MQL system is packed in accordance with the commercially approved standards and the regulations of the destination countries as well as with DIN ISO 9001. Transport packages must be labelled with the note “Do not throw!”.

There are no limitations for transport by surface, air or sea.

Upon receiving the package, please check the items for possible damage, and ensure the package is complete by checking the supply papers. Keep the packaging material until any and all problems have been clarified.

In general, the system should be stored in a dry and dust-free environment. The storage temperatures can be found in the specifications.

7 Lubricants

Only lubricants approved for the MQL system may be fed. Unsuitable lubricants may result in a failure of the lubrication system and possibly in considerable material damage and personal injuries.

The lubricants specified for use in the SKF MQL system LUBRILEAN® VarioPlus have been especially matched to the high demands of the implemented MQL technology as far as their chemical and physical characteristics are concerned. For this reason, only lubricants offered by SKF may be used. If you would like to use other lubricants, please consult SKF before.

The lubricants listed in Table 1 are compatible with each other, i.e. no time- and cost-consuming container cleaning is necessary when changing the lubricant.

We would be glad to answer any further questions you might have about the lubricants.

Do not mix different lubricants unless you have the express consent of SKF to do so. Otherwise, damage and unpredictable hazards may occur and a time- and cost-consuming internal cleaning of the system is inevitable.

We will not accept liability for any kind of damage resulting from an improper use of lubricants or the use of lubricants which have not been approved by SKF in writing concerning their device compatibility and feedability.

Keep in mind that lubricants are generally considered environmentally hazardous and combustible substances and that their transport, storage and processing require the implementation of special safety measures. Within this context, please also observe the material safety data sheet for the respective lubricant.

Table 1. Recommended Lubricants

Designation	Composition	Properties	Range of application
LubriOil	Fatty acid ester with additives	Viscosity: 47mm²/s at 40°C Density: 0.92 g/cm³ at 20°C	All-purpose applications
LubriFluid F100	Synthetic polyhydric ester based on natural fatty oil derivatives with oxidation inhibitors	Viscosity: 25mm²/s at 40°C Density: 0.84 g/cm³ at 20°C	Particularly for small tools and aluminium lubrication tasks

8 Design and Function

Fig. 1 shows the design of the MQL system LUBRILEAN® VarioPlus.

8.1 Principle of Minimal Quantity Lubrication (MQL)

Minimal quantity lubrication is a total loss lubrication, i.e. the applied lubricant is almost entirely used up during processing and the lubricant need not be treated during the processing cycle. An air current with finely distributed oil drops, so-called aerosol, lubricates the friction spots between the tool and the chips running off in the chip grooves.

The minimal quantity lubrication system assures effective lubrication of cutting processes using smallest amounts of lubricant. The arduous task of cleaning and disposing large amounts of lubricant and cooling lubricant is, if necessary at all, made much easier.

8.2 Active Principle of Aerosol

Referring to the size and distribution of the lubricant drops, the SKF MQL system LUBRILEAN® VarioPlus produces very homogeneous aerosol with a very small drop size. Due to their minimum size, the lubricant drops are very light-weight, which in turn results in a very small mass inertia. Due to their mass inertia, these tiny lubricant drops can be transported through lines over very long distances without separation. Additionally, the transport of the aerosol through rotating spindles and tools is unproblematic for the minimal quantity lubrication systems even at very high rotational speeds, since the effect of centrifugal force on the oil drops is very low.

Fig. 1. Design LubriLean® VarioPlus (schematic drawing, subject to technical changes)

1 Aerosol outlets (∅ 12 mm)
2 Safety valve (12 bar)
3 Inlet with non-return valve
4 Air supply unit
5 Main air valve with compressed air connection (NG 7-8 mm)
6 Oil drain plug
7 Pressure control valve
8 Level indicator
9 Variable area flow meter
10 Oil valve adjusting screw
11 Aerosol container
12 Female connector 24 (main valve)
13 Pressure gauge display inlet pressure of the compressed air supply
14 Rotary knob for pressure control
15 Float (oil flow indication)
16 Connector level switch (Fig. 2, Fig. 3)
17 Pressure switch

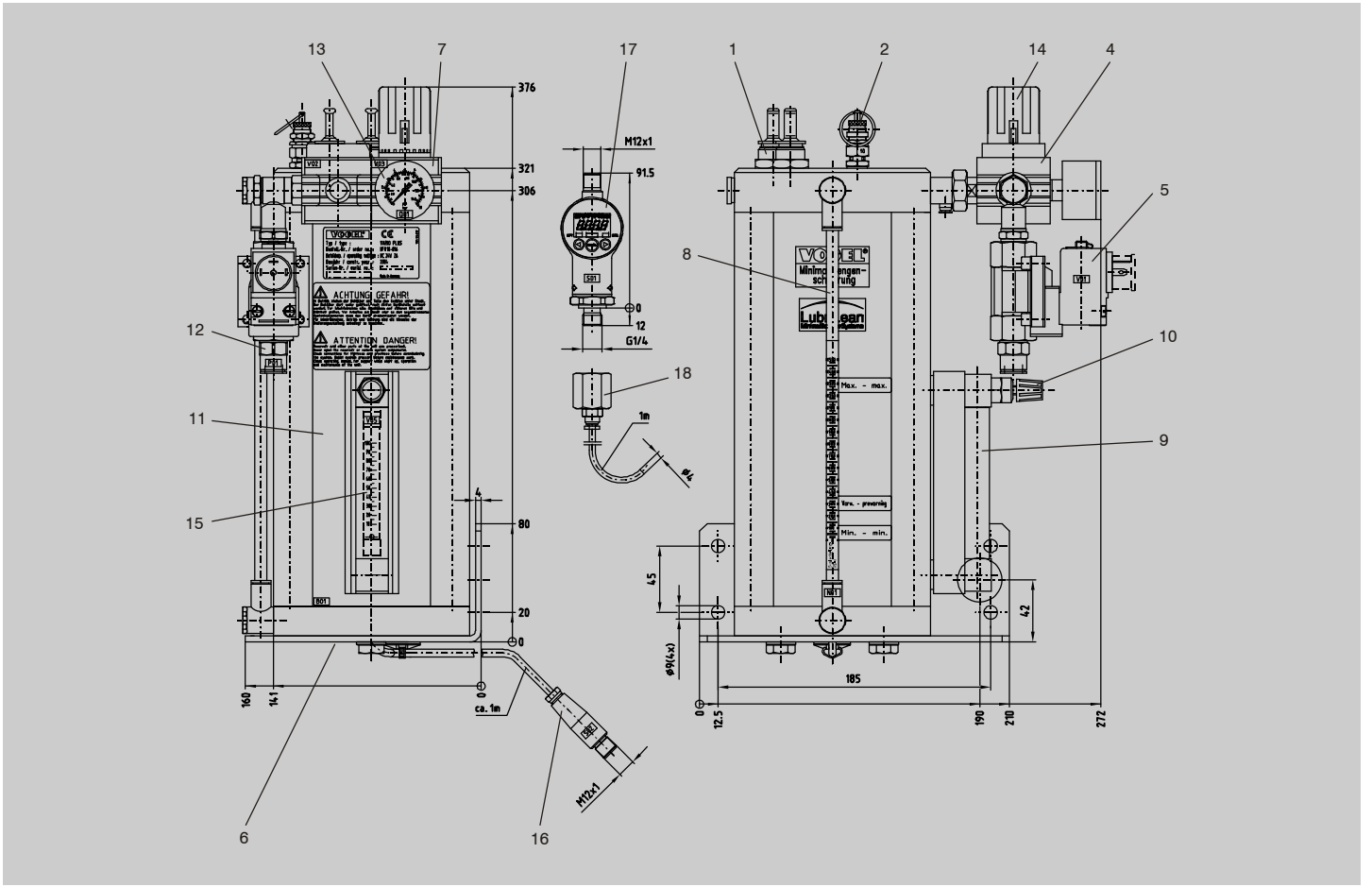
13
7
17
1
2
14
4
5
8
10
9
12
11
15
6
16
18
376
321
306
80
20
0
4
160
141
ca. 1m
M12x1
91.5
12
G1/4
1m
ø4
45
ø9(4x)
185
42
0
12.5
190
210
272
Max. - max.
Min. - min.
ACHTUNG GEFAHR!
ATTENTION DANGER!

8.3 System Design

The MQL system LUBRILEAN® VarioPlus offers the following valves serving the regulation of the mixture composition of the aerosol and the regulation of the aerosol flow:

8.3.1 Main Air Valve (No. 5)

The main air valve separates all subsequent units of the aerosol container from the compressed air supply. No aerosol is produced when the main air valve is closed.

The aerosol container and downstream units could still be under pressure whenever the main air valve is closed.

8.3.2 Oil Valve (No. 10)

The oil valve regulates the amount of lubricant required for aerosol production. The oil valve is integrated in an adjustable variable area flow meter. It is operated manually and is progressively adjustable. The amount by which the lubricant flow changes can be read from the variable area flow meter display.

8.3.3 Pressure Control Valve (No. 7)

The pressure control valve regulates the aerosol flow. It is operated manually and is progressively adjustable. To open the valve, pull the rotary knob away from the system, keep the knob in this position and subsequently rotate it in clockwise direction. To close it, pull the knob and turn it counterclockwise. The changes to the settings can be read from the pressure gauge.

8.4 Optical Level Indicator

There is an ascending pipe on the side of the aerosol container from which the lubricant level can be directly read. The minimum and maximum level are indicated by marks on the aerosol container.

8.5 Electrical Level Indicator

In addition to the optical indicator, the MQL system LubriLean® VarioPlus is equipped with a 4-point float switch. For the connector assignment, please refer to Fig. 2 and Fig. 3.

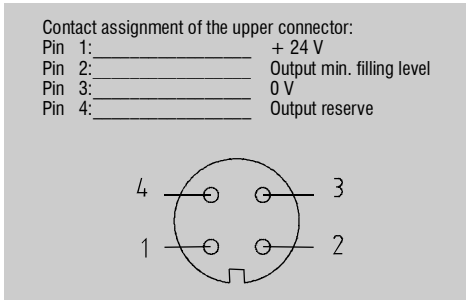

Fig. 2. Level indicator (No. 16) – contact assignment of the upper connector

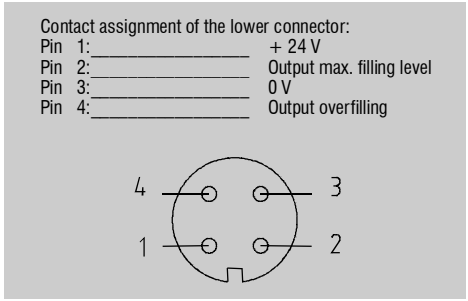

Fig. 3. Level indicator (No. 16) – contact assignment of the lower connector

8.6 Display and Setting of the Lubricant Flow Amount

The lubricant flow amount is indicated by a flow meter with float, which is attached to the side of the aerosol container. The respective lubricant flow amount can be read off from the position of the float in the glass tube.

Note:
The float is always read off at its horizontal diameter (Fig. 4).

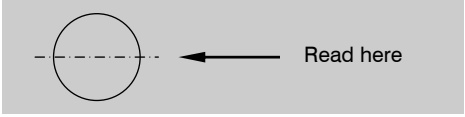

Fig. 4. Reading the float (Nr. 15)

The necessary lubricant flow amount is set with a rotary knob on the variable area flow meter.

8.7 Control of the Internal Container Pressure

During operation, the internal container pressure is measured. If the differential pressure falls below a certain value set ex-works because a tool with a very small cooling duct diameter is used, the compressed air supply is cut and no further aerosol is produced. Aerosol which has already been produced drains off. If the differential pressure rises again, aerosol production is continued. This process is called "clocking" and is noticeable by an audible noise during operation.

The pressure switch has been factory-set for a 6 bar air pressure supply.

9 Installation

The scope of supply of the MQL system LUBRILEAN® VarioPlus includes an angle bracket, which is screwed to the base plate of the aerosol container and by means of which the MQL system is fitted to the machine tool.

The dimensions of the installation of the MQL system LUBRILEAN® VarioPlus are specified in Fig. 1.

The system may be connected only by accordingly qualified and instructed personnel. Comply with the notes in this operating manual.

9.1 Connection of Aerosol Outlets

The MQL system LUBRILEAN® VarioPlus is equipped with three aerosol outlets (No. 1, Fig. 1) designed as plug-in connections for hoses with an external diameter of 12 mm.

Only pneumatic hoses which are suitable for an operating pressure of at least 10 bar and resistant towards the applied lubricant may be used.

Usually, only one pressure outlet is used. The two alternative outlets are sealed with a plug.

Prior to removing the plug, the container must be depressurised.

The lubricant volume that will be supplied at the tool in the form of aerosol depends - among other factors - on the existing line and duct cross-sections of the aerosol path between the MQL system and the escape openings at the tool.

To avoid aerosol and pressure losses in the supply line to the effective spot, you should observe the following rules:

- The lubricant supply line should not show any major changes of the cross-section, diaphragm-shaped interruptions or sharp bends. The lubricant could separate from the aerosol and precipitate at these spots, being no longer available for the lubrication task.
- The line cross-section of the aerosol lines leading to the workpiece should be sufficiently large to ensure for the transport of a suitable amount of lubricant. In the area of the tool, however, the duct diameter should be < 8 mm as a higher flow rate is desired here.

- The main aerosol line should be dimensioned as short as possible. The longer the aerosol line, the higher the pressure and aerosol losses due to the separating lubricant. In addition to this, a long distance between the MQL system and the machine extends the response time in case of aerosol conversion.

- The aerosol lines should be routed as straight as possible. Particularly "sharp bends" have to be avoided as lubricant could separate at these spots. If deflections cannot be avoided, they should have a radius of at least 200 mm.

- The aerosol line should show as few cross-section changes as possible. If cross-section changes are unavoidable, the transitions should be made as smooth as possible. A transition angle of <15° is ideal.

- All junctures should be smooth and have no holes or projecting edges. This particularly refers to the transition areas between the tool and the tool holding fixture.

- The aerosol lines should not be exposed to any vibrations.

- The aerosol line should follow a continual ascent to the machine. Downward bends are to be avoided, since lubricant could accumulate in these areas, e.g. if the machine is at a standstill.

- If it is impossible to lay the aerosol lines without any downward bends, it is necessary to blow out the accumulated lubricant with the tool removed from time to time. For this, the respective safety instructions have to be adhered to.

- To spindles and rotating tools, the aerosol should be fed in axial direction if possible. With a radial supply, the lubricant may be "hurled off", especially at high spindle speeds, i.e. the aerosol is separated. This particularly refers to application cases with small, rapidly rotating tools.

- For workpiece processing, only tools suitable for minimal quantity lubrication should be used. This is the only way to ensure a sufficient lubricant supply during the processing cycle.

- The outlet of the cooling duct bore hole on the tool should not lie only on the tool blade, as is usually the case with many tools for full-spray lubrication. Optimal results are not attained when such tools are used, whereas minimal quantity lubrication systems can achieve much better results. Because of the considerably lower operating pressure of minimal quantity lubrication systems in comparison to full-spray lubrication, the effective spot between the tool and the workpiece is insufficiently lubricated.

9.2 Rotary Transmission Leadthrough and Spindle

Only rotary transmission leadthroughs may be used which have been constructively designed for dry running.

The small amounts of lubricant used in minimal quantity lubrication do not suffice for adequate lubrication of the rotary transmission leadthrough.

Disregarding this fact could lead to considerable damage to the machine tool. Please contact the machine manufacturer and get advice on whether the rotary transmission leadthrough of the machine tool is suitable for dry running.

Rotary transmission leadthroughs and spindles with integrated non-return valves must be modified.

Non-return valves are often built into rotary transmission leadthroughs and spindles by the machine manufacturer.

These non-return valves have to be removed as it cannot be guaranteed that they are completely opened by the low operating pressure of the MQL system. Consequently, a sufficient lubrication during the cutting process cannot be assured.

Please contact the machine tool manufacturer and ask how the non-return valves can be removed.

9.3 Compressed Air Connection

Prior to connecting your MQL system to the compressed air supply, ensure that the main air valve is closed.

For the connection to the compressed air supply, the MQL system LUBRILEAN® VarioPlus is equipped with an NG8 coupling socket for hoses with an internal diameter of 7-8 mm.

For the required compressed air, please observe the data listed in Table 2.

The MQL system LUBRILEAN® VarioPlus can be already operated as of an inlet pressure of 6 bar. However, the system reaches its peak performance only with an inlet pressure of 8 bar.

The MQL system LUBRILEAN® VarioPlus may only be operated up to a maximum inlet pressure of 10 bar. Higher pressures are dangerous for both people and the machine.

Table 2. Compressed Air Requirements

Requirements	Values
Maximum inlet pressure in the supply	10 bar
Minimum inlet pressure	6 bar
Supply pressure with a decrease of 1200 standard litres	Max. 6 bar excess pressure
Compressed air quality class according to ISO 8573-1	5
Maximum particle size	40 μm
Maximum particle density	10 mg/m³
Maximum pressure dew point	+7 °C
Maximum lubricant concentration	25 mg/m³

9.4 Electrical Connection

The MQL system LubriLean® VarioPlus is equipped with a female connector in accordance with Harting HAN Q5/0.

10 Parameter Setting

10.1 General Information

The optimum settings of the MQL system LUBRILEAN® VarioPlus depends on a series of factors such as the current inlet pressure, the length of the aerosol lines, the type and size of the tool, the cooling duct cross-section and the processing procedures. Because of this it is impossible to specify binding setting parameters for the respective processing situations here.

The setting parameters given in Fig. 5 are guide values and are to provide you with a first orientation for the setting of the MQL system LUBRILEAN® VarioPlus for your particular application.

We recommend ascertaining and optimising the necessary settings for your application by undertaking test runs in order to attain the best results for your processing procedures.

After long periods of machine standstill or a change of tools, temporary inconsistencies in the aerosol supply to the lubricating point as well as oil mist may arise. However, during operation the lubricant supply stabilises and the oil mist disappears.

10.2 Effects of Inlet Pressure

The MQL system LUBRILEAN® VarioPlus draws the power it needs for aerosol production from the compressed air supplied to the system.

The system is ready for operation and produces an aerosol adequate for most lubrication tasks at an inlet pressure of at least 6 bar. Thanks to the differential pressure controlled compressed air supply, a sufficient lubrication supply to small tools can also be assured.

However, the system reaches its peak performance only with an inlet pressure of 8 bar.

10.3 Parameter Setting Procedure

The following instructions should help you find the correct settings for the MQL system and your particular application.

1. Put the MQL system LUBRILEAN® VarioPlus into operation by opening the main air valve.
2. Set the air valve to 6 bar and the lubricant flow to 100% and, with the spindle at a standstill, check whether the aerosol flows through the duct system of the machine tool unhamperdly. This can be seen best if the tool is removed from the tool holding fixture. The aerosol must emerge visibly from the duct system.
3. Clamp the tool in the tool holding fixture again and hold an oil-free workpiece surface approx. 1 - 3 mm below the tool at the outlet duct. If no lubricant film forms on the workpiece surface, there is a fault in the duct system of the tool. Please check the tool and the tool holder.
4. In order to ascertain the required lubricant amount when the tool is rotating, fasten a smooth and oil-free plate on the machine table. Then move the rotating tool until it is 1 - 3 mm above the plate.

5. Move the tool horizontally forward at approx. 0.6 m/min. Then you should be able to see a closed lubricant film with a width of approx. double that of the tool diameter on the plate.

6. Adapt the aerosol mixture and amount for the processing procedure until you achieve the desired result.
   We recommend that you note the settings in case you want to use them again.

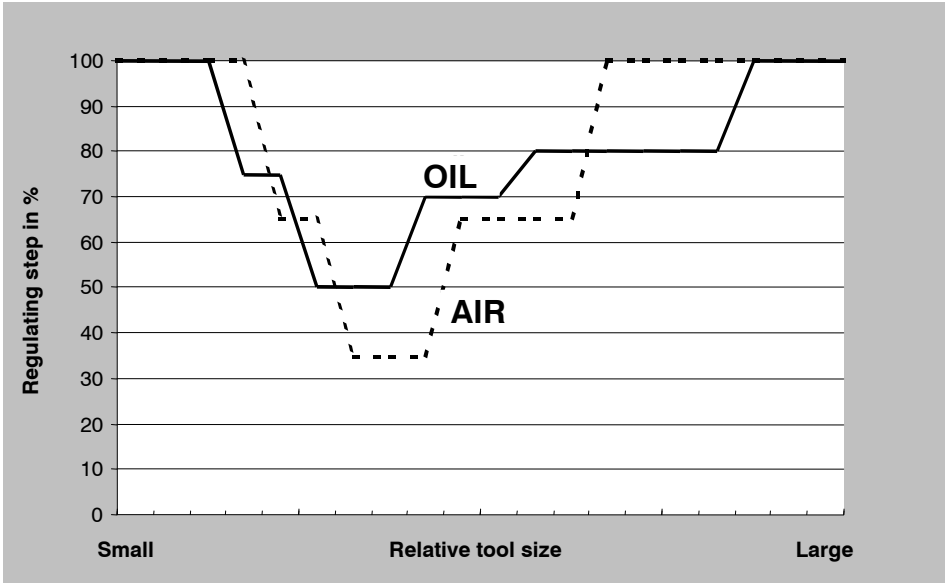

Fig. 5. Orientation help for Parameter Setting

11 First Operation

Prior to operating the MQL system for the first time, a function check must be carried out and the operating parameters set.

Proceed as follows for first operation:

1. Ensure a tight fit of the control cabinet housing and of all connections prior to the first operation.
2. Check whether a sufficient amount of lubricant is in the lubricant container.
3. Check whether compressed air is applied.
4. Set the operating parameters as described in the previous chapter.
5. Start the system.

12 Maintenance

Maintenance work may be carried out only by qualified and trained specialists instructed to do so.

Maintenance works may only be carried out if the MQL system has been deenergised by respectively qualified personnel before. Works on an MQL system which has not been deenergised may result in personal injuries.

The lubricant container may be under pressure. For this reason, depressurise it prior to installation, repair and maintenance works.

The SKF MQL system LUBRILEAN® VarioPlus is a low-maintenance system. To ensure a proper functioning and eliminate hazards at the outset, you should regularly check all connections and junctions as well as the function.

Any works beyond those described in this manual may only be carried out by the authorised SKF service personnel.

SKF LUBRICATION SYSTEMS GERMANY AG will not accept liability for any kind of damage resulting from improper maintenance works on the MQL system.

12.1 Re-Filling Lubricant

Only lubricants offered by SKF may be used. Please observe that we will not accept liability for any damage resulting from the use of lubricants other of those approved by us in writing concerning device compatibility and feedability.

Prior to being filled with lubricant, the lubricant container has to be depressurised.

To depressurise the container, close the main valve and subsequently isolate the MQL system from the compressed air supply.

Wait until the pressure has been released via the aerosol outlets towards the tool if this path is not closed by a ball valve or the like. If this is the case, the pressure can only be released via the relief position of the main valve.

Observe that the valves have to be opened via the machine control.

Check whether the pressure has been completely released by shortly opening the

pressure control valve. For this, control the display on the pressure gauge.

If you are certain that the pressure has been completely released, you can now screw on the inlet with a suitable tool.

Notice:
There is a seal ring underneath the screw.

Use a funnel with sieve insert to fill in the lubricant up to the maximum level mark in the container.

If the container has been overfilled (filling level above "maximum"), the excessive lubricant has to be drained (refer to the Chapter “Draining Lubricant”, Page 19), as otherwise aerosol production is not possible.

Make sure to tightly close the inlet after having completed the filling process.

Ensure that the seal ring is in the correct position before you screw in the plug screw.

Tighten the plug screw, but do not use force; otherwise the seal could be damaged.

Carry out a visual check to verify impermeability when the system is in operation.

12.2 Changing Lubricant

If you want to change the lubricant, please drain the previously used lubricant before adding the new lubricant. Read the following chapter for information on draining the lubricant.

Do not mix different lubricants together unless you have the express consent of SKF to do so. Otherwise, damage may occur, which makes an extensive system cleaning unavoidable.

Then, fill in the new lubricant as described in the previous section.

12.3 Draining Lubricant

Prior to draining the lubricant, the lubricant container has to be depressurised.

To depressurise the container, please follow the instructions in the Chapter “Re-Filling Lubricant”, Page 18.

To drain lubricant, loosen the drainage screw on the bottom of the container with a suitable tool.

Please observe the legal guidelines for the disposal of lubricants.

Make sure to re-close the drain valve after the lubricant has been drained.

12.4 Cleaning

If required, the MQL system can be cleaned with mild, material-compatible (non-alkaline, no soap) detergents.

For safety reasons, we recommend to isolate the MQL system from the compressed air and power supply and depressurise the container as described in the Chapter “Re-Filling Lubricant”, Page 18.

During cleaning, hoses and cables should remain connected and openings should be closed to avoid the intrusion of detergents into the MQL system.

Interior cleaning is not necessary during normal operation if compatible lubricants are used.

If an unsuitable or dirty lubricant has been used accidentally, the interior of the lubricant container must be cleaned. Please contact us if this situation arises. Never clean the interior of the MQL system yourself.

Any disassembly of the lubricant container or other functional parts of the MQL system is impermissible and results in the expiration of any and all warranty claims. Furthermore, this may bear hazards, e.g. by discharging lubricant.

The lubricant container accommodates sensitive installations. Improper disassembly could lead to malfunctions or system failure.

13 Failures

To ensure a trouble-free functioning of the MQL system, the following requirements have to be met:

- The system has been connected correctly.
- Compressed air with sufficient inlet pressure (at least 6 bar) is supplied.

Table 3 offers an overview of a series of problems which you can rectify yourself. You should contact us if the problem cannot be rectified by taking the measures described here.

CAUTION DANGER TO LIFE
Repair work may only be carried out if the system has been deenergised by respectively qualified personnel.

CAUTION DANGER TO LIFE
Working on systems that have not been deenergised may cause personal injuries.

Table 3. Failures and Rectification

Problem	Possible cause	Rectification
The system does not produce any aerosol.	Use of lubricant not approved of by SKF.	Use only lubricants which have been approved by SKF.
	The system is defective or misadjusted.	Contact our service department.
The aerosol does not reach the tool.	The aerosol transport lines are bent, blocked or have excessive changes in cross-sections.	When laying the aerosol lines, observe our instruction in Chapter “Connection of Aerosol Outlets”, Page 13.
	A shut-off valve on the spindle inlet is not actuated / is incorrectly actuated.	Consult the manufacturer of your machine tool.
	A non-return valve is integrated in the spindle.	The non-return valve must be removed. For this, observe our instructions in Chapter “Rotary Transmission Leadthrough and Spindle”, Page 15.
	The spindle is unsuitable (e.g. rough transitions, too narrow cross section).	Use a suitable spindle, ask the manufacturer of your machine tool.
	Improper rotary transmission leadthrough.	Observe our instruction in Chapter “Rotary Transmission Leadthrough and Spindle”, Page 15.

Table 3. cont. **Failures and Rectification**

Problem	Possible cause	Rectification
The aerosol does not reach the tool.	The transitions from the spindle to the tool holding fixture are unfavourable.	Use only tool holding fixtures which are suitable for minimal quantity lubrication.
	The tool holding fixture is not tight.	Use only tool holding fixtures which are suitable for minimal quantity lubrication.
	The tool has an unsuitable lead-in and a very small cooling duct.	Use only tools suitable for minimal quantity lubrication systems.
	For small tools: the inlet pressure is too low.	Increase the inlet pressure.
Despite sufficient aerosol on the tool, processing is faulty.	The tool has an unsuitable outlet bore hole.	Use only tools suitable for minimal quantity lubrication systems.
	The section parameters are not adapted to processing with minimal quantity lubrication.	Change the section parameters.

14 Decommissioning

14.1 Temporary Shut-Down

To temporarily shut down the MQL system, the entire system should be isolated from the compressed air supply and the container depressurised. Furthermore, the system has to be disconnected from the operating voltage and professionally protected against re-start and direct contact.

It is recommended to drain the lubricant for longer standstill times.

14.2 Final Shut-Down

If you want to shutdown the MQL system for good, please observe the legal regulations on the disposal of lubricant-containing components.

The system can also be taken back by SKF for disposal if the costs are covered.

15 Service

Please contact our sales offices or our international representatives if you have any questions or problems.

You can find a list with current addresses on the Internet at:

www.skf.com/schmierung

16 Technical Data

Table 4. Specifications for the system LUBRILEAN® VarioPlus

Designation	Unit	LUBRILEAN® VarioPlus
Housing		
Aerosol outlets		Top
Outer dimensions	mm	H: 505, W: 243, D: 275
Increase of the volume boxed because of projecting add-on pieces (without connections)	mm	H: 525, W: 271, D: 275
Weight	kg	7.1
Compressed air		
Maximum inlet pressure	bar	10
Minimum inlet pressure	bar	6 (8*) *for tools with small aerosol ducts
Connections		
Compressed air connection		NG8 coupling socket
Aerosol outlets		
Calibration of the hoses Material Diameter	 mm	External Polyamide 12

Notes

Notes

Notes

Notes

SKF Lubrication Systems Germany AG

Motzener Straße 35/37
12277 Berlin
Postfach: 970444, 12704 Berlin
Telefon: (++49) 30-7 20 02-0
Fax: (++49) 30-7 20 02-111
E-Mail: lubrication-germany@skf.com
WWW: www.skf.com/schmierung

951-130-225 29th April, 2009