R03-P

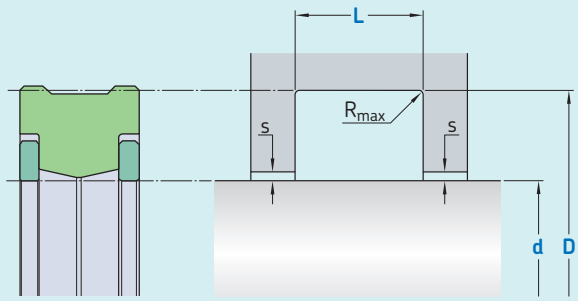

Ordering dimensions in **blue**

Surface roughness	R_{tmax}	R_a
	µm	
Sliding surface	≤ 2,5	0,1–0,5
Bottom of groove	≤ 6,3	≤ 1,6
Groove face	≤ 15	≤ 3

Hardness: Min 45 HRC (55 HRC recommended), hardened depth > 0,3 mm.
Bearing area: 50–95% and a cutting depth of 0,5 R_z based on C_{ref} = 0%

Standard dimensions

d* over	d* incl.	D H9	L + 0,2	R_{max}	s
mm					
21	**22**	d + 8	6,5	0,2	e8/H9
22	**36**	d + 10	8,0	0,2	e8/H9
36	**56**	d + 12	8,0	0,2	e8/H9
56	**85**	d + 15	11,0	0,2	f7/H7
85	**140**	d + 20	13,0	0,2	f7/H7
140	**200**	d + 25	16,0	0,2	f7/H7
200	**300**	d + 30	19,0	0,2	f7/H7
300		d + 40	26,0	0,2	f7/H7

* Tolerance area shaft ≤ 56 mm → e8, > 56 mm → f7

Ordering example

Profile	**Rotary seal R03-P**
d x D x L [mm]	**100 x 120 x 13**
Sealing material / Back-up rings	**ECOPUR / SKF Ecotal**

Operating parameters

Material Seal	Back-up rings[3]	**Temperature** from	to	**Speed**[1] max	**Pressure**[2] max
		°C		m/s	bar *(MPa)*
ECOPUR	SKF Ecotal	–30	+100	0,2	400 *(40)*
ECOPUR	SKF Ecomid	–30	+110	0,2	400 *(40)*
H-ECOPUR	SKF Ecotal	–20	+100	0,2	400 *(40)*
H-ECOPUR	SKF Ecomid	–20	+110	0,2	400 *(40)*
S-ECOPUR	SKF Ecotal	–20	+100	0,2	400 *(40)*
S-ECOPUR	SKF Ecomid	–20	+110	0,2	400 *(40)*
T-ECOPUR	SKF Ecotal	–40	+100	0,2	400 *(40)*
T-ECOPUR	SKF Ecomid	–40	+110	0,2	400 *(40)*

IMPORTANT NOTE: The stated operating conditions represent general indications. It is recommended not to use all maximum values simultaneously.
1) Surface speed limit values are valid only in the presence of a lubrication film.
2) Pressure ratings depend on the size of the extrusion gap.
3) Size limitation D: Up to 260 mm SKF Ecotal, from 260 – 400 mm SKF Ecotal or SKF Ecomid and above 400 mm SKF Ecomid.

skf.com | skf.com/seals

® SKF, ECOPUR, H-ECOPUR, S-ECOPUR and T-ECOPUR are registered trademarks of the SKF Group.

© SKF Group 2019
The contents of this publication are the copyright of the publisher and may not be reproduced (even extracts) unless prior written permission is granted. Every care has been taken to ensure the accuracy of the information contained in this publication but no liability can be accepted for any loss or damage whether direct, indirect or consequential arising out of the use of the information contained herein.

PUB SE/P8 11870/3 EN · November 2019