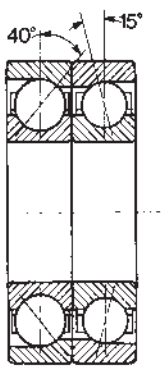

8000

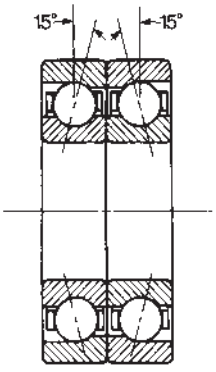

8000-BB

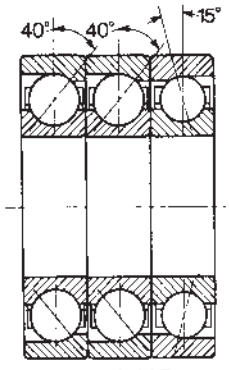

8000-AAB

The PumPac 8000 Series consists of a matched set of 40° (A) and 15° (B) angular contact ball bearings with computer optimized internal design. They are manufactured to ABEC-3 tolerances and are supplied with an inner ring centered machined brass cage.

Also available is the 8000BB PumPac Diamond Series consisting of two 15° (B) bearings in a back-to-back (DB) arrangement; and the 8000AAB Series consisting of two 40° (A) bearings in tandem, matched back-to-back (DB) with one 15° (B) bearing. Each arrangement incorporates a small amount of axial clearance, when clamped, to compensate for mounting fits and thermal growth.

Series	Page
8000 PumPac	**159**
8000BB PumPac Diamond	**160**
8000AAB PumPac Triplex Set	**161**
Shaft and Housing Fits	**162**
Mounting Instructions	**163**
Equivalent Load and Life	**164**
Minimum Thrust Load Requirements	**164**
Life Calculation Examples	**165**

The PumPac 8000 Series is used in centrifugal pumps, large vertical electric motors, compressors, centrifuges, and other applications subject to thrust loads operating at relatively high speeds. The bearings are mounted so that the 40° (A) bearing takes the primary thrust load.

Traditionally, matched sets of 40° angular contact ball bearings are used to obtain maximum theoretical fatigue life, but in most instances only a fraction of the calculated life is actually achieved. At the heart of these premature failures are phenomena known as “ball sliding” and “ball shuttling” in the unloaded (or inactive) bearing. Angular contact bearings used in high speed (e.g. 3600 RPM) pumps and other applications require a minimum axial load for proper operation. Without axial load, gyroscopic forces in the unloaded bearing can cause the balls to rotate perpendicular to their true rolling axis and momentarily lose contact with the raceway. As a result, a microscopic wear (or lapping) process occurs giving the appearance of a burnished or polished raceway. The oil film thickness separating the ball and raceway is reduced, producing friction and heat which lowers oil viscosity and accelerates wear. This thermally unstable condition dramatically reduces bearing service life.

The main benefit of the PumPac system is that the 15° (B) bearing is designed with considerably less internal clearance than the 40° (A) bearing, making it less susceptible to the gyroscopic forces which result in ball sliding or shuttling. The 15° bearing also provides additional radial stiffness helping to maintain the integrity of the shaft and mechanical seals. The 40° (loaded) bearing provides sufficient axial rigidity under the imposed thrust load.

The PumPac is furnished with a one piece, inner ring land-guided, machined brass cage and is manufactured to meet ABEC-3 grade tolerances. Dimensional stability is assured by heat treating the bearing’s rings and rolling elements for operation up to 375˚F (190˚C).

For identification purposes, the 40° bearing is marked with the letter “A,” and the 15° bearing with the letter “B”. A “V” is etched on the outer ring surface of the pair so that the apex falls on the “B” bearing. The pair should always be mounted so that the “V” points in the same direction as the primary thrust load, which places this load on bearing “A”. Any reversing load is carried on bearing “B”.

The PumPac is also available in the 8000BB PumPac Diamond series, which consists of a matched set of 15° (B) bearings in a back-to-back arrangement. When mounted correctly, the marking on the outer ring surface forms a diamond. This series is desirable in high speed, lightly loaded applications in which axial loads are balanced, resulting in reduced operating temperatures and increased life.

For applications involving very heavy primary thrust loads, the PumPac may be furnished as a triplex set identified as the 8000AAB Series. It consists of two 40° (A) bearings in tandem matched back-to-back (DB) with one 15° (B) bearing. The outer ring surface of the set is marked with a “V” pointing in the direction of primary thrust.

For applications having a rotating shaft and stationary housing, an ISO k5 shaft fit and an ISO H6 housing fit are recommended as shown in the table on page 162.

NOTE: The basic radial load rating, C, is calculated according to the actual bearing geometry and not according to ISO/ABMA Standards.

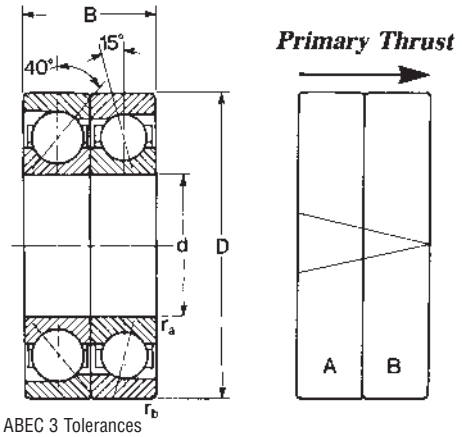

The PumPac 8000 Series consists of one 40° (A) bearing and one 15° (B) bearing.

ABEC 3 Tolerances

MRC Bearing Number	Bore d		Outside Diameter D		Width B		Fillet Radius[1] r_a		Fillet Radius[1] r_b		Basic Radial Load Rating[2] 40° (A) Dynamic C[4]		Basic Radial Load Rating[2] 40° (A) Static C_o		Basic Radial Load Rating[2] 15° (B) Dynamic C[4]		Basic Radial Load Rating[2] 15° (B) Static C_o		Speed Rating[3] Grease	Speed Rating[3] Oil
	mm	in	mm	in	mm	in	mm	in	mm	in	N	lbf	N	lbf	N	lbf	N	lbf	RPM	RPM
8218	90	**3.5433**	160	**6.2992**	60	**2.3622**	2.0	**.08**	1.0	**.04**	133 000	**29 900**	143 000	**32 100**	124 000	**27 900**	108 000	**24 300**	3 400	4 500
8219	95	**3.7402**	170	**6.6929**	64	**2.5197**	2.0	**.08**	1.0	**.04**	151 000	**33 900**	163 000	**36 600**	133 000	**29 900**	118 000	**26 500**	3 200	4 300
8220	100	**3.9370**	180	**7.0866**	68	**2.6772**	2.0	**.08**	1.0	**.04**	159 000	**35 700**	173 000	**38 900**	146 000	**32 800**	134 000	**30 100**	3 000	4 000
8222	110	**4.3307**	200	**7.8740**	76	**2.9921**	2.0	**.08**	1.0	**.04**	190 000	**42 700**	220 000	**49 500**	182 000	**40 900**	170 000	**38 200**	2 600	3 600
8224	120	**4.7244**	215	**8.4646**	80	**3.1496**	2.0	**.08**	1.0	**.04**	238 000	**53 500**	245 000	**55 100**	199 000	**44 700**	193 000	**43 400**	2 200	3 200
8238	190	**7.4803**	340	**13.3858**	110	**4.3307**	3.0	**.12**	1.0	**.04**	351 000	**78 900**	570 000	**128 000**	377 000	**84 800**	500 000	**112 000**	1 400	1 900
8308	40	**1.5748**	90	**3.5433**	46	**1.8110**	1.5	**.06**	1.0	**.04**	60 500	**13 600**	45 500	**10 200**	48 800	**11 000**	33 500	**7 530**	6 700	9 000
8309	45	**1.7717**	100	**3.9370**	50	**1.9685**	1.5	**.06**	1.0	**.04**	76 100	**17 100**	61 000	**13 700**	58 500	**13 200**	40 500	**9 100**	6 000	8 000
8310	50	**1.9685**	110	**4.3307**	54	**2.1260**	2.0	**.08**	1.0	**.04**	87 100	**19 600**	72 000	**16 200**	76 100	**17 100**	52 000	**11 700**	5 300	7 000
8311	55	**2.1654**	120	**4.7244**	58	**2.2835**	2.0	**.08**	1.0	**.04**	101 000	**22 700**	85 000	**19 100**	88 400	**19 900**	61 000	**13 700**	4 800	6 300
8312	60	**2.3622**	130	**5.1181**	62	**2.4409**	2.0	**.08**	1.0	**.04**	114 000	**25 600**	96 500	**21 700**	101 000	**22 700**	71 000	**16 000**	4 500	6 000
8313	65	**2.5591**	140	**5.5118**	66	**2.5984**	2.0	**.08**	1.0	**.04**	127 000	**28 500**	112 000	**25 200**	108 000	**24 300**	80 000	**18 000**	4 300	5 600
8314	70	**2.7559**	150	**5.9055**	70	**2.7559**	2.0	**.08**	1.0	**.04**	148 000	**33 300**	134 000	**31 500**	121 000	**27 200**	93 000	**20 900**	3 800	5 000
8315	75	**2.9528**	160	**6.2992**	74	**2.9134**	2.0	**.08**	1.0	**.04**	159 000	**35 700**	150 000	**33 700**	146 000	**32 800**	114 000	**25 600**	3 600	4 800
8316	80	**3.1496**	170	**6.6929**	78	**3.0709**	2.0	**.08**	1.0	**.04**	172 000	**38 700**	166 000	**37 300**	159 000	**35 700**	129 000	**29 200**	3 400	4 500
8317	85	**3.3465**	180	**7.0866**	82	**3.2283**	2.5	**.10**	1.0	**.04**	186 000	**41 800**	186 000	**41 800**	174 000	**39 100**	146 000	**32 800**	3 200	4 300
8318	90	**3.5433**	190	**7.4803**	86	**3.3858**	2.5	**.10**	1.0	**.04**	199 000	**44 700**	204 000	**45 900**	186 000	**41 800**	160 000	**36 000**	3 000	4 000
8319	95	**3.7402**	200	**7.8740**	90	**3.5433**	2.5	**.10**	1.0	**.04**	212 000	**47 600**	228 000	**51 300**	199 000	**44 700**	180 000	**40 500**	2 800	3 800
8320	100	**3.9370**	215	**8.4646**	94	**3.7008**	2.5	**.10**	1.0	**.04**	238 000	**53 500**	270 000	**60 700**	212 000	**47 700**	200 000	**45 000**	2 600	3 600
8322	110	**4.3307**	240	**9.4488**	100	**3.9370**	2.5	**.10**	1.0	**.04**	265 000	**59 600**	320 000	**71 900**	255 000	**57 300**	255 000	**57 300**	2 200	3 200
8326	130	**5.1181**	280	**11.0236**	116	**4.5669**	3.0	**.12**	1.0	**.04**	345 000	**77 500**	455 000	**102 000**	296 000	**66 500**	345 000	**77 600**	1 800	2 600
8330	150	**5.9055**	320	**12.5984**	130	**5.1181**	3.0	**.12**	1.0	**.04**	410 000	**92 100**	585 000	**132 000**	390 000	**87 700**	475 000	**107 000**	1 600	2 200
8336	180	**7.0866**	380	**14.9606**	150	**5.9055**	3.0	**.12**	1.0	**.04**	507 000	**114 000**	815 000	**183 000**	475 000	**107 000**	640 000	**144 000**	1 300	1 600

[1] Fillet radius indicates maximum fillet radius on shaft or in housing which bearing corner will clear.
[2] For thrust rating of bearing (A), multiply C by 1.75 and Co by 3.85.
For thrust rating of bearing (B), multiply C by 0.83 and Co by 2.00.
[3] Values have been determined through historical application and practice. For a more complete explanation, see page 274.
[4] Rating for one million revolutions or 500 hours at 33⅓ RPM.

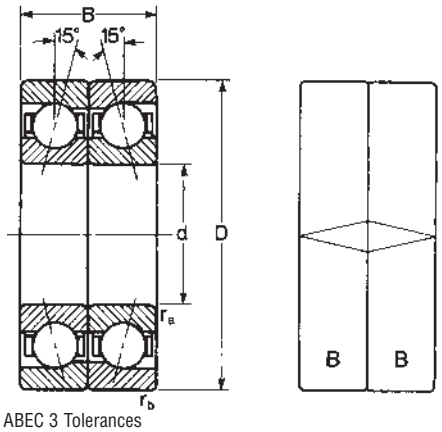

The PumPac 8000-BB Series consists of two 15° (B) bearings.

ABEC 3 Tolerances

MRC Bearing Number	Bore d		Outside Diameter D		Width B		Fillet Radius[1] r_a		Fillet Radius[1] r_b		Basic Radial Load Rating[2] Dynamic C[4]		Basic Radial Load Rating[2] Static C_0		Speed Rating[3] Grease	Speed Rating[3] Oil
	mm	in	mm	in	mm	in	mm	in	mm	in	N	lbf	N	lbf	RPM	RPM
8218BB	90	**3.5433**	160	**6.2992**	60	**2.3622**	2.0	**.08**	1.0	**.04**	203 000	**45 600**	216 000	**48 600**	3 800	5 400
8219BB	95	**3.7402**	170	**6.6929**	64	**2.5197**	2.0	**.08**	1.0	**.04**	216 000	**48 600**	236 000	**53 100**	3 600	5 100
8220BB	100	**3.9370**	180	**7.0866**	68	**2.6772**	2.0	**.08**	1.0	**.04**	238 000	**53 500**	270 000	**60 700**	3 400	4 800
8222BB	110	**4.3307**	200	**7.8740**	76	**2.9921**	2.0	**.08**	1.0	**.04**	296 000	**66 500**	340 000	**76 400**	3 000	4 400
8224BB	120	**4.7244**	215	**8.4646**	80	**3.1496**	2.0	**.08**	1.0	**.04**	319 000	**71 800**	390 000	**87 700**	2 800	4 100
8238BB	190	**7.4803**	340	**13.3858**	110	**4.3307**	3.0	**.12**	1.0	**.04**	605 000	**136 000**	1 000 000	**225 000**	1 800	2 600
8308BB	40	**1.5748**	90	**3.5433**	46	**1.8110**	1.5	**.06**	1.0	**.04**	79 300	**17 800**	67 000	**15 100**	7 500	11 000
8309BB	45	**1.7717**	100	**3.9370**	50	**1.9685**	1.5	**.06**	1.0	**.04**	95 600	**21 500**	81 500	**18 300**	6 800	9 600
8310BB	50	**1.9685**	110	**4.3307**	54	**2.1260**	2.0	**.08**	1.0	**.04**	124 000	**27 900**	104 000	**23 400**	6 300	9 000
8311BB	55	**2.1654**	120	**4.7244**	58	**2.2835**	2.0	**.08**	1.0	**.04**	143 000	**32 100**	122 000	**27 400**	5 600	8 100
8312BB	60	**2.3622**	130	**5.1181**	62	**2.4409**	2.0	**.08**	1.0	**.04**	165 000	**37 100**	143 000	**32 100**	5 000	7 200
8313BB	65	**2.5591**	140	**5.5118**	66	**2.5984**	2.0	**.08**	1.0	**.04**	174 000	**39 100**	160 000	**36 000**	4 800	6 800
8314BB	70	**2.7559**	150	**5.9055**	70	**2.7559**	2.0	**.08**	1.0	**.04**	199 000	**44 700**	190 000	**42 700**	4 500	6 300
8315BB	75	**2.9528**	160	**6.2992**	74	**2.9134**	2.0	**.08**	1.0	**.04**	238 000	**53 500**	228 000	**51 300**	4 300	6 000
8316BB	80	**3.1496**	170	**6.6929**	78	**3.0709**	2.0	**.08**	1.0	**.04**	255 000	**57 300**	260 000	**58 500**	3 800	5 400
8317BB	85	**3.3465**	180	**7.0866**	82	**3.2283**	2.5	**.10**	1.0	**.04**	281 000	**63 200**	292 000	**65 600**	3 600	5 100
8318BB	90	**3.5433**	190	**7.4803**	86	**3.3858**	2.5	**.10**	1.0	**.04**	302 000	**67 900**	325 000	**73 100**	3 400	4 800
8319BB	95	**3.7402**	200	**7.8740**	90	**3.5433**	2.5	**.10**	1.0	**.04**	325 000	**73 100**	360 000	**80 900**	3 300	4 500
8320BB	100	**3.9370**	215	**8.4646**	94	**3.7008**	2.5	**.10**	1.0	**.04**	345 000	**77 600**	400 000	**89 900**	3 000	4 400
8322BB	110	**4.3307**	240	**9.4488**	100	**3.9370**	2.5	**.10**	1.0	**.04**	416 000	**93 500**	510 000	**115 000**	2 600	3 900
8326BB	130	**5.1181**	280	**11.0236**	116	**4.5669**	3.0	**.12**	1.0	**.04**	475 000	**107 000**	695 000	**156 000**	2 300	3 300
8330BB	150	**5.9055**	320	**12.5984**	130	**5.1181**	3.0	**.12**	1.0	**.04**	624 000	**140 000**	950 000	**214 000**	2 000	2 900
8336BB	180	**7.0866**	380	**14.9606**	150	**5.9055**	3.0	**.12**	1.0	**.04**	780 000	**175 000**	1 270 000	**286 000**	1 600	2 400

[1] Fillet radius indicates maximum fillet radius on shaft or in housing which bearing corner will clear.
[2] For thrust rating multiply C by 0.51 and Co by 1.00.
[3] Values have been determined through historical application and practice. For a more complete explanation, see page 274.
[4] Rating for one million revolutions or 500 hours at 33⅓ RPM.

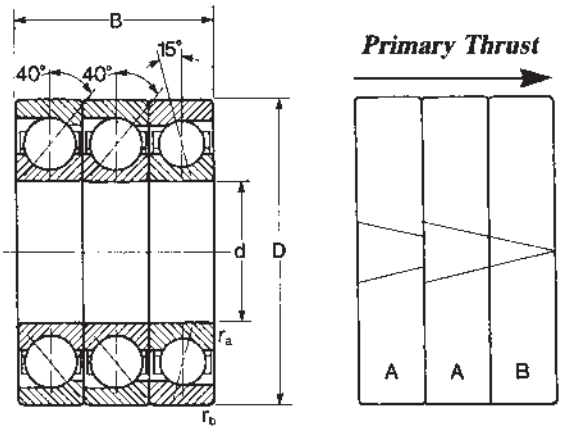

The PumPac 8000-AAB Series consists of two 40° (A) bearings and one 15° (B) bearing.

ABEC 3 Tolerances

MRC Bearing Number	Bore d		Outside Diameter D		Width B		Fillet Radius[1] r_a		Fillet Radius[1] r_b		Basic Radial Load Rating[2] 40° (AA Pair) Dynamic[4] C		Basic Radial Load Rating[2] 40° (AA Pair) Static C_0		Basic Radial Load Rating[2] 15° (B) Dynamic[4] C		Basic Radial Load Rating[2] 15° (B) Static C_0		Speed Rating[3] Grease	Speed Rating[3] Oil
	mm	in	mm	in	mm	in	mm	in	mm	in	N	lbf	N	lbf	N	lbf	N	lbf	RPM	RPM
8218AAB	90	**3.5433**	160	**6.2992**	90	**3.5433**	2.0	**.08**	1.0	**.04**	216 000	**48 500**	285 000	**64 100**	124 000	**27 900**	108 000	**24 300**	3 400	4 500
8219AAB	95	**3.7402**	170	**6.6929**	96	**3.7795**	2.0	**.08**	1.0	**.04**	247 000	**55 500**	325 000	**73 100**	133 000	**29 900**	118 000	**26 500**	3 200	4 300
8220AAB	100	**3.9370**	180	**7.0866**	102	**4.0157**	2.0	**.08**	1.0	**.04**	260 000	**58 400**	345 000	**78 700**	146 000	**32 800**	134 000	**30 100**	3 000	4 000
8222AAB	110	**4.3307**	200	**7.8740**	114	**4.4882**	2.0	**.08**	1.0	**.04**	307 000	**69 000**	440 000	**98 900**	182 000	**40 900**	170 000	**38 200**	2 600	3 600
8224AAB	120	**4.7244**	215	**8.4646**	120	**4.7244**	2.0	**.08**	1.0	**.04**	390 000	**87 600**	490 000	**110 000**	199 000	**44 700**	193 000	**43 400**	2 200	3 200
8238AAB	190	**7.4803**	340	**13.3858**	165	**6.4961**	3.0	**.12**	1.0	**.04**	572 000	**129 000**	1140 000	**256 000**	377 000	**84 800**	500 000	**112 000**	1 400	1 900
8308AAB	40	**1.5748**	90	**3.5433**	69	**2.7165**	1.5	**.06**	1.0	**.04**	97 500	**21 900**	91 500	**20 600**	48 800	**11 000**	33 500	**7 530**	6 700	9 000
8309AAB	45	**1.7717**	100	**3.9370**	75	**2.9528**	1.5	**.06**	1.0	**.04**	124 000	**27 900**	122 000	**27 400**	58 500	**13 200**	40 500	**9 100**	6 000	8 000
8310AAB	50	**1.9685**	110	**4.3307**	81	**3.1890**	2.0	**.08**	1.0	**.04**	143 000	**32 100**	143 000	**32 100**	76 100	**17 100**	52 000	**11 700**	5 300	7 000
8311AAB	55	**2.1654**	120	**4.7244**	87	**3.4252**	2.0	**.08**	1.0	**.04**	165 000	**37 100**	170 000	**38 200**	88 400	**19 900**	61 000	**13 700**	4 800	6 300
8312AAB	60	**2.3622**	130	**5.1181**	93	**3.6614**	2.0	**.08**	1.0	**.04**	186 000	**41 800**	193 000	**43 400**	101 000	**22 700**	71 000	**16 000**	4 500	6 000
8313AAB	65	**2.5591**	140	**5.5118**	99	**3.8976**	2.0	**.08**	1.0	**.04**	208 000	**46 700**	224 000	**50 400**	108 000	**24 300**	80 000	**18 000**	4 300	5 600
8314AAB	70	**2.7559**	150	**5.9055**	105	**4.1339**	2.0	**.08**	1.0	**.04**	242 000	**54 400**	270 000	**60 700**	121 000	**27 200**	93 000	**20 900**	3 800	5 000
8315AAB	75	**2.9528**	160	**6.2992**	111	**4.3701**	2.0	**.08**	1.0	**.04**	260 000	**58 400**	300 000	**67 400**	146 000	**32 800**	114 000	**25 600**	3 600	4 800
8316AAB	80	**3.1496**	170	**6.6929**	117	**4.6063**	2.0	**.08**	1.0	**.04**	281 000	**63 100**	335 000	**75 300**	159 000	**35 700**	129 000	**29 200**	3 400	4 500
8317AAB	85	**3.3465**	180	**7.0866**	123	**4.8425**	2.5	**.10**	1.0	**.04**	302 000	**67 900**	375 000	**84 300**	174 000	**39 100**	146 000	**32 800**	3 200	4 300
8318AAB	90	**3.5433**	190	**7.4803**	129	**5.0787**	2.5	**.10**	1.0	**.04**	325 000	**73 000**	405 000	**91 000**	186 000	**41 800**	160 000	**36 000**	3 000	4 000
8319AAB	95	**3.7402**	200	**7.8740**	135	**5.3150**	2.5	**.10**	1.0	**.04**	345 000	**77 500**	455 000	**102 000**	199 000	**44 700**	180 000	**40 500**	2 800	3 800
8320AAB	100	**3.9370**	215	**8.4646**	141	**5.5512**	2.5	**.10**	1.0	**.04**	390 000	**87 600**	540 000	**121 000**	212 000	**47 700**	200 000	**45 000**	2 600	3 600
8322AAB	110	**4.3307**	240	**9.4488**	150	**5.9055**	2.5	**.10**	1.0	**.04**	436 000	**98 000**	640 000	**144 000**	255 000	**57 300**	255 000	**57 300**	2 200	3 200
8326AAB	130	**5.1181**	280	**11.0236**	174	**6.8504**	3.0	**.12**	1.0	**.04**	559 000	**126 000**	915 000	**206 000**	296 000	**66 500**	345 000	**77 600**	1 800	2 600
8330AAB	150	**5.9055**	320	**12.5984**	195	**7.6772**	3.0	**.12**	1.0	**.04**	663 000	**149 000**	1180 000	**265 000**	390 000	**87 700**	475 000	**107 000**	1 600	2 200
8336AAB	180	**7.0866**	380	**14.9606**	225	**8.8583**	3.0	**.12**	1.0	**.04**	824 000	**185 000**	1630 000	**366 000**	475 000	**107 000**	640 000	**144 000**	1 300	1 600

[1] Fillet radius indicates maximum fillet radius on shaft or in housing which bearing corner will clear.
[2] For thrust rating of (AA) multiply C by 1.75 and Co by 3.85. For thrust rating of (B) multiply C by 0.83 and Co by 2.00.
[3] Values have been determined through historical application and practice. For a more complete explanation, see page 274.
[4] Rating for one million revolutions or 500 hours at 33⅓ RPM.

MRC Bearing Number	Shaft Diameter (k5)				Fit		Housing Diameter (H6)[1]				Fit	
	Maximum		Minimum		.001	.0001	Maximum		Minimum		.001	.0001
	mm	in	mm	in	mm	in	mm	in	mm	in	mm	in
8218	90.018	**3.5440**	90.003	**3.5434**	3T-33T	**1T-13T**	160.025	**6.3002**	160.000	**6.2992**	0-43L	**0-17L**
8219	95.018	**3.7409**	95.003	**3.7403**	3T-33T	**1T-13T**	170.025	**6.6939**	170.000	**6.6929**	0-43L	**0-17L**
8220	100.018	**3.9377**	100.003	**3.9371**	3T-33T	**1T-13T**	180.025	**7.0876**	180.000	**7.0866**	0-43L	**0-17L**
8222	110.018	**4.3314**	110.003	**4,3308**	3T-33T	**1T-13T**	200.029	**7.8751**	200.000	**7.8740**	0-49L	**0-19L**
8224	120.018	**4.7251**	120.003	**4.7245**	3T-33T	**1T-13T**	215.029	**8.4657**	215.000	**8.4646**	0-49L	**0-19L**
8238	190.024	**7.4812**	190.004	**7.4805**	4T-46T	**2T-18T**	340.036	**13.3872**	340.000	**13.3858**	0-64L	**0-25L**
8308	40.013	**1.5753**	40.002	**1.5749**	2T-23T	**1T-9T**	90.022	**3.5442**	90.000	**3.5433**	0-35L	**0-14L**
8309	45.013	**1.7722**	45.002	**1.7718**	2T-23T	**1T-9T**	100.022	**3.9379**	100.000	**3.9370**	0-35L	**0-14L**
8310	50.013	**1.9690**	50.002	**1.9686**	2T-23T	**1T-9T**	110.022	**4.3316**	110.000	**4.3307**	0-35L	**0-14L**
8311	55.015	**2.1660**	55.002	**2.1655**	2T-27T	**1T-11T**	120.022	**4.7253**	120.000	**4.7244**	0-35L	**0-14L**
8312	60.015	**2.3628**	60.002	**2.3623**	2T-27T	**1T-11T**	130.025	**5.1191**	130.000	**5.1181**	0-40L	**0-16L**
8313	65.015	**2.5597**	65.002	**2.5592**	2T-27T	**1T-11T**	140.025	**5.5128**	140.000	**5.5118**	0-40L	**0-16L**
8314	70.015	**2.7565**	70.002	**2.7560**	2T-27T	**1T-11T**	150.025	**5.9065**	150.000	**5.9055**	0-40L	**0-16L**
8315	75.015	**2.9534**	75.002	**2.9529**	2T-27T	**1T-11T**	160.025	**6.3002**	160.000	**6.2992**	0-43L	**0-17L**
8316	80.015	**3.1502**	80.002	**3.1497**	2T-27T	**1T-11T**	170.025	**6.6939**	170.000	**6.6929**	0-43L	**0-17L**
8317	85.018	**3.3472**	85.003	**3.3466**	3T-33T	**1T-13T**	180.025	**7.0876**	180.000	**7.0866**	0-43L	**0-17L**
8318	90.018	**3.5440**	90.003	**3.5434**	3T-33T	**1T-13T**	190.029	**7.4814**	190.000	**7.4803**	0-49L	**0-19L**
8319	95.018	**3.7409**	95.003	**3.7403**	3T-33T	**1T-13T**	200.029	**7.8751**	200.000	**7.8740**	0-49L	**0-19L**
8320	100.018	**3.9377**	100.003	**3.9371**	3T-33T	**1T-13T**	215.029	**8.4657**	215.000	**8.4646**	0-49L	**0-19L**
8322	110.018	**4.3314**	110.003	**4.3308**	3T-33T	**1T-13T**	240.029	**9.4499**	240.000	**9.4488**	0-49L	**0-19L**
8326	130.021	**5.1189**	130.003	**5.1182**	3T-39T	**1T-15T**	280.032	**11.0249**	280.000	**11.0236**	0-57L	**0-23L**
8330	150.021	**5.9063**	150.003	**5.9056**	3T-39T	**1T-15T**	320.036	**12.5998**	320.000	**12.5984**	0-64L	**0-25L**
8336	180.021	**7.0874**	180.003	**7.0867**	3T-39T	**1T-15T**	380.036	**14.9620**	380.000	**14.9606**	0-64L	**0-25L**

[1] Cast iron or steel housings. For aluminum or other soft metal housings make housing bore limits same as bearing O.D. limits
[2] "T" indicates tight, "L" indicates loose

PumPac bearings require proper mounting orientation with respect to the direction of the imposed primary thrust load, which must be taken by the 40° (“A”) bearing. They should be installed so that the “V” etched on the O.D. of the bearings points in the direction of the primary thrust load, as illustrated below for PumPac 8000 and 8000 AAB arrangements.

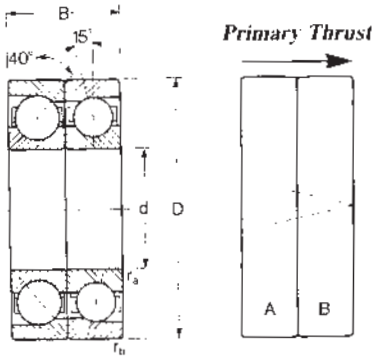

8000

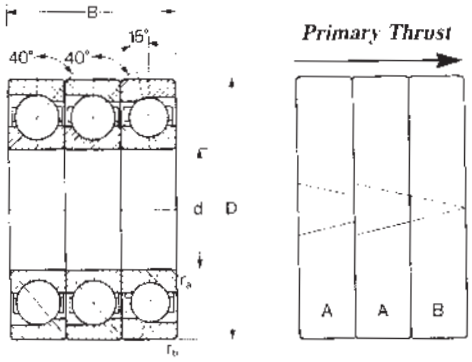

8000AAB

The following method considers only thrust load in either direction with negligible radial load. For combined radial and thrust loads consult MRC Technical Services for analysis.

Dynamic equivalent radial load

Primary thrust on bearing A (40˚)

$P = 0.57\ F_A$

Reversing thrust on bearing B (15˚)

$P = YF_A$

P = Dynamic equivalent radial load
F_A = Thrust load
Y = Thrust load factor
Z = Number of balls
D = Ball diameter

$\frac{F_A}{ZD^2}$		Y
N,mm	Lb,in.	
0.172	25	1.47
0.345	50	1.40
0.689	100	1.30
1.03	150	1.23
1.38	200	1.19
2.07	300	1.12
3.45	500	1.02
5.17	750	1.00
6.89	1 000	1.00

Size	ZD^2		Size	ZD^2		Size	ZD^2	
	mm	inch		mm	inch		mm	inch
8218B	7410	11.5	8310B	3990	6.19	8318B	11800	18.3
8219B	7900	12.3	8311B	4690	7.26	8319B	13100	20.3
8220B	9070	14.1	8312B	5430	8.42	8320B	14400	22.4
8222B	11700	18.1	8313B	5930	9.19	8322B	18900	29.3
8224B	13100	20.3	8314B	6800	10.5	8326B	25700	39.8
8238B	31200	48.4	8315B	8390	13.0	8330B	31500	48.8
8308B	2450	3.80	8316B	9470	14.7	8336B	45700	70.9
8309B	3020	4.69	8317B	10600	16.5			

Values of Y for loads not shown are obtained from chart at right.

Life rating

$$L10 = \left(\frac{C}{P}\right)^3 \text{ (millions of revolutions)}$$

or

$$L10h = \frac{10^6}{60n}\left(\frac{C}{P}\right)^3 \text{ (Hours)}$$

C = Basic dynamic load rating
P = Dynamic equivalent radial load
n = speed in RPM

Notes: For 8000BB series, see page 80. For combined radial and thrust loads please contact MRC Bearing Services.

Minimum Thrust Load A Factor

Size	A	Size	A	Size	A
8218	148.50	8310	36.26	8318	332.30
8219	191.90	8311	57.36	8319	405.70
8220	224.10	8312	77.30	8320	629.40
8222	352.10	8313	114.40	8322	904.70
8224	450.50	8314	144.60	8326	1631.00
8238	2499.00	8315	182.70	8330	2731.00
8308	17.31	8316	215.80	8336	5006.00
8309	29.08	8317	269.40		

Static equivalent radial load

Bearing A (40˚)

$P_0 = 0.26\ F_A$

Bearing B (15˚)

$P_0 = 0.5\ F_A$

P_0 = Static equivalent radial load
F_A = Thrust load

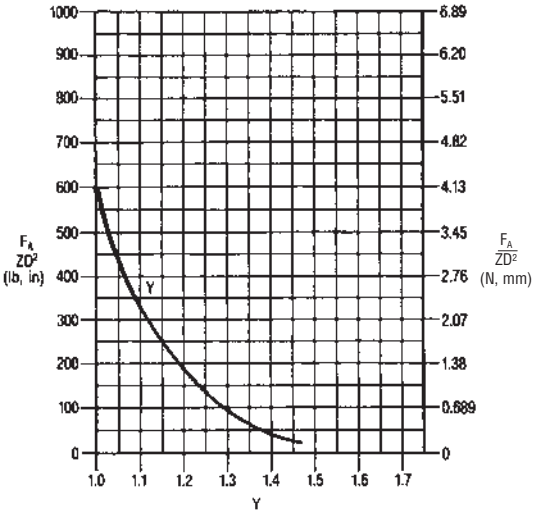

Minimum Thrust Load For Angular Contact Ball Bearings

Satisfactory operation of angular contact ball bearings requires sufficient traction forces between the balls and races to minimize damage caused by sliding or skidding. This is particularly important at high speeds where the inertia forces of the balls and cage and the viscous drag in the lubricant can have a detrimental influence on the rolling conditions.

The minimum required thrust load can be determined from the following formula.

$$F_A = A\left(\frac{n}{1000}\right)^2 \text{ Newtons}$$

OR

$$F_A = 0.2248\ A\left(\frac{n}{1000}\right)^2 \text{ Pounds}$$

Where, F_A = Minimum thrust load
A = Bearing design factor listed in the following tables
n = Speed in RPM

Note: For Duplex Bearings mounted in tandem, multiply the single-bearing thrust value by the number of bearings in tandem.

Dynamic equivalent radial load and life calculation examples

PumPac 8000 Series
Bearing size: 8310
Speed: 3500 RPM
Basic dynamic radial load rating (C):
Bearing A = 19600 lbf
Bearing B = 17100 lbf

Bearing A
Primary thrust load (F_A) = 3000
Equivalent load (P) = 0.57 F_A
P = 0.57 × 3000 = 1710

$$\text{Life (L10)} = \left(\frac{C}{P}\right)^3 = \left(\frac{19600}{1710}\right)^3 = 1506 \times 10^6 \text{ Rev.}$$

or

$$\text{Life (L10h)} = \frac{10^6}{60n}\left(\frac{C}{P}\right)^3 = \frac{10^6}{60 \times 3500}\left(\frac{19600}{1710}\right)^3 = 7171 \text{ Hrs}$$

Bearing B
Reversing thrust load (F_A) = 1000
F_A/ZD^2 = 1000/6.19 = 162
Equivalent load (P) = Y F_A
Y = 1.22
P = 1.22 × 1000 = 1220

$$\text{Life (L10)} = \left(\frac{C}{P}\right)^3 = \left(\frac{17100}{1220}\right)^3 = 2754 \times 10^6 \text{ Rev.}$$

or

$$\text{Life (L10h)} = \frac{10^6}{60n}\left(\frac{C}{P}\right)^3 = \frac{10^6}{60 \times 3500}\left(\frac{17100}{1220}\right)^3 = 13113 \text{ Hrs}$$

PumPac Diamond 8000 BB Series
Bearing size: 8317BB
Speed: 3000 RPM
Basic dynamic radial load rating (C):

$$\text{Single bearing} = \frac{C}{(2)^{0.7}} = \frac{63200}{1.625} = 38904 \text{ lbf}$$

Primary Thrust Bearing
Primary thrust load (F_A) = 2500
F_A/ZD^2 = 2500/16.5 = 152
Equivalent load (P) = Y F_A
Y = 1.23
P = 1.23 × 2500 = 3075

$$\text{Life (L10)} = \left(\frac{C}{P}\right)^3 = \left(\frac{38904}{3075}\right)^3 = 2025 \times 10^6 \text{ Rev.}$$

or

$$\text{Life (L10h)} = \frac{10^6}{60n}\left(\frac{C}{P}\right)^3 = \frac{10^6}{60 \times 3000}\left(\frac{38904}{3075}\right)^3 = 11251 \text{ Hrs}$$

Reversing Thrust Bearing
Reversing thrust load (F_A) = 1000
F_A/ZD^2 = 1000/16.5 = 61
Equivalent load (P) = Y F_A
Y = 1.38
P = 1.38 × 1000 = 1380

$$\text{Life (L10)} = \left(\frac{C}{P}\right)^3 = \left(\frac{38904}{1380}\right)^3 = 22405 \times 10^6 \text{ Rev.}$$

or

$$\text{Life (L10h)} = \frac{10^6}{60n}\left(\frac{C}{P}\right)^3 = \frac{10^6}{60 \times 3000}\left(\frac{38904}{1380}\right)^3 = 124472 \text{ Hrs}$$

PumPac 8000 AAB Series
Bearing size: 8314 AAB
Speed: 3500 RPM
Basic dynamic radial load rating (C):
Bearings AA = 54400 lbf
Bearing B = 27200 lbf

Bearings AA
Primary thrust load (F_A) = 5000
Equivalent load (P) = 0.57 F_A
P = 0.57 × 5000 = 2850

$$\text{Life (L10)} = \left(\frac{C}{P}\right)^3 = \left(\frac{54400}{2850}\right)^3 = 6954 \times 10^6 \text{ Rev.}$$

or

$$\text{Life (L10h)} = \frac{10^6}{60n}\left(\frac{C}{P}\right)^3 = \frac{10^6}{60 \times 3500}\left(\frac{54400}{2850}\right)^3 = 33116 \text{ Hrs}$$

Bearing B
Reversing thrust load (F_A) = 1500
F_A/ZD^2 = 1500/10.5 = 143
Equivalent load (P) = Y F_A
Y = 1.24
P = 1.24 × 1500 = 1860

$$\text{Life (L10)} = \left(\frac{C}{P}\right)^3 = \left(\frac{27200}{1860}\right)^3 = 3127 \times 10^6 \text{ Rev.}$$

or

$$\text{Life (L10h)} = \frac{10^6}{60n}\left(\frac{C}{P}\right)^3 = \frac{10^6}{60 \times 3500}\left(\frac{27200}{1860}\right)^3 = 14892 \text{ Hrs}$$