Series 310 metering device

Innovative, modern design for single-line lubrication systems

Oil or fluid grease

12–38 bar *(174–551 psi)*

+5 to 50 °C *(+41 to 122 °F)*

Small- to medium-sized machines

The industry's first non-metallic metering device

As the industry's first non-metallic metering device, SKF's Series 310 has a unique appearance. However, its sleek, contemporary design provides proven SKF reliability for a minimum of 400 000 lubrication cycles.

Developed for pre-lubrication applications using oil and fluid grease, this metering device is simple to install utilizing plastic or metallic lines and can be mounted in either an upright or inverted position. It also features easily identifiable dosing elements to meet various lubrication requirements.

The Series 310 metering device is suitable for indoor use on small- to medium-sized machines in applications such as machine tool, textile, woodworking, printing and more.

Advantages:

- Constructed of lightweight, high-performance, non-metallic materials
- Easy to install using plastic or metallic lines
- Color-coded dosing elements to identify lubricant volumes
- Provides precise metering of lubricant
- Simple, flexible machine mounting in any position
- 2-, 3- or 5-port manifolds available
- Suitable for oil and fluid grease
- Compatible with all single-line lubrication pumps

Standard hose connection
Main line ∅ 6 mm, outlet ∅ 4 mm

Color-coded dosing elements
Easy identification of output level

End-of-line plug available
Red plug signals closed main line outlet

How to order

Order code 3 1 _ – 8 0 0 – _ _ _ _ _ – _ _

Product series

Number of outlets

2 = 2 outlets
3 = 3 outlets
5 = 5 outlets

Connection outlet

8 = Material Elastomer (FPM)

Dosage

0 = not available
2 = blue; 0,03 cm³; *0,0018 in³*
3 = white; 0,06 cm³; *0,0036 in³*
4 = grey; 0,10 cm³; *0,0061 in³*
5 = black; 0,16 cm³; *0,0097 in³*
Y = grey; closed; blind plug

Lube point 1
Lube point 2
Lube point 3 *
Lube point 4 **
Lube point 5 **

Connection main line

B = ∅ 6 mm
Y = closed (with #898-210-001)

Left side
Right side

* not available for 2-outlet manifold 312 = 0
** not available for 2- and 3-outlet manifold 312 = 0; 313 = 0

Order example

313-800-3Y500-BY

- 3-outlet manifold
- Outlet connection: FPM, ∅ 4 mm
- Dosage: 0,06 cm³; closed; 0,16 cm³; not available
- Main line connection left: ∅ 6 mm
- Main line connection right: closed

Accessories	Part number
Closing plug main line	898-210-001

For more fittings and accessories see publication
→ PUB LS/P2 15859 EN · 1-0103-EN

Technical data

Lubricant	Oil, 20–1 500 mm²/s Fluid grease, NLGI 00, 000	
Operating pressure	min. 12 bar	*174 psi*
	max. 38 bar	*551 psi*
Relief pressure	< 3 bar	*< 43.5 psi*
Operating temperature	5 to 50 °C	*41 to 122 °F*
Metering volumes	0,03; 0,06; 0,10; 0,16 cm³ Closed option available	*0,0018; 0.0036; 0.0061; 0.0097 in³*
Outlets	2-, 3- or 5-port manifolds	
Material	High-performance PA66 resin	
Dimensions		
2-outlet manifold	68×70×20,5 mm	*2.67×2.75×0.8 in*
3-outlet manifold	85×70×20,5 mm	*3.34×2.75×0.8 in*
5-outlet manifold	119×70×20,5 mm	*4.68×2.75×0.8 in*

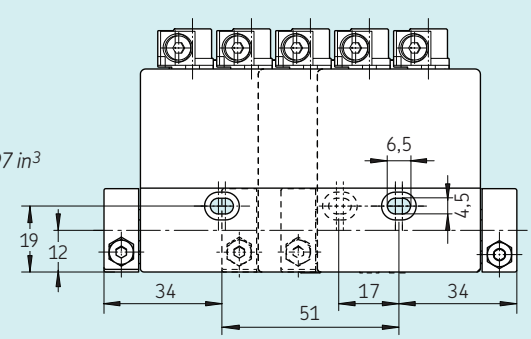

skf.com | skf.com/lubrication | skf.com/310

® SKF is a registered trademark of the SKF Group.

© SKF Group 2018
The contents of this publication are the copyright of the publisher and may not be reproduced (even extracts) unless prior written permission is granted. Every care has been taken to ensure the accuracy of the information contained in this publication but no liability can be accepted for any loss or damage whether direct, indirect or consequential arising out of the use of the information contained herein.

PUB LS/P2 17505 EN · May 2018