DK09-D

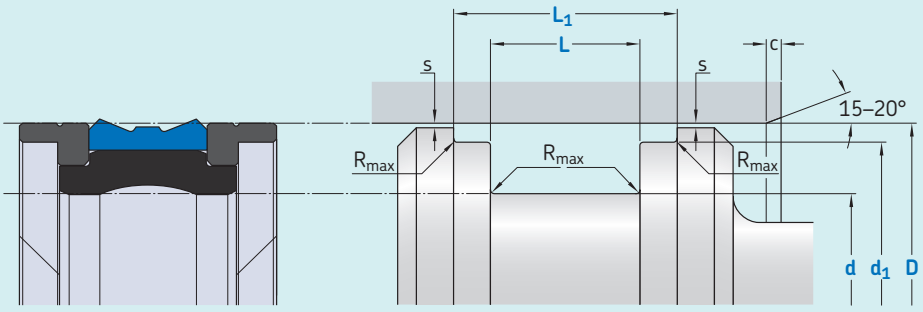

Ordering dimensions in **blue**

Surface roughness	R_{tmax}	R_a
	µm	
Sliding surface	≤ 2,5	0,05–0,2
Bottom of groove	≤ 6,3	≤ 1,6
Groove face	≤ 15	≤ 3

Bearing area: 50–95% and a cutting depth of 0,5 R_z based on C_{ref} = 0%

Standard dimensions

D H9 over	incl.	d h9	d_1 h8	L + 0,2	L_1	R_{max}	c	s[1]
mm								
20	**50**	D – 10	D – 3	12,5	20,5	0,4	4,0	0,35
50	**80**	D – 15	D – 4	20,0	28,0	0,4	5,0	0,52
80	**150**	D – 20	D – 5	25,0	36,0	0,4	6,0	0,65
150	**200**	D – 25	D – 6	32,0	46,0	0,4	8,5	0,78

[1] Extrusion gap values shown above are valid for a temperature of 70 °C, higher temperatures require lower values.

Ordering example

Profile	**Piston seal DK09-D**
D x d/d_1 x L/L_1 [mm]	**100 x 80/95 x 25/36**
Sealing material / Energizer / Back-up rings	**ECOPUR DD / SKF Econbr / SKF Ecotal**

DK09-D

Operating parameters

Material			Temperature		Speed[1]	Pressure[2]
Seal	Energizer	Back-up rings	from	to	max	max
			°C		m/s	bar (*MPa*)
■ ECOPUR DD	■ SKF Econbr	■ SKF Ecotal	–30	+100	0,5	400 (*40*)

IMPORTANT NOTE: The stated operating conditions represent general indications. It is recommended not to use all maximum values simultaneously.
[1] Surface speed limit values are valid only in the presence of a lubrication film.
[2] Pressure ratings depend on the size of the extrusion gap.

skf.com | skf.com/seals

® SKF and ECOPUR are registered trademarks of the SKF Group.

© SKF Group 2019
The contents of this publication are the copyright of the publisher and may not be reproduced (even extracts) unless prior written permission is granted. Every care has been taken to ensure the accuracy of the information contained in this publication but no liability can be accepted for any loss or damage whether direct, indirect or consequential arising out of the use of the information contained herein.

PUB SE/P8 16289/1 EN · November 2019