Curve Sensor Control Units of Series LCG2-A/LCG2-B

for the control of centralized lubrication systems in rail vehicles

Operating instructions

EN

Version 05

Masthead

These operating instructions pursuant to EC MachineryDirective 2006/42/EC are an integral part of the described product and must be kept for future use.
These operating instructions have been prepared in accordance with the established standards and rules for technical documentation, VDI 4500 and EN 292.

Service

If you have technical questions, please contact the following addresses:

SKF Lubrication Systems Germany GmbH

Berlin Plant
Motzener Strasse 35/37
12277 Berlin
Germany
Tel. +49 (0)30 72002-0
Fax +49 (0)30 72002-111
www.skf.com/lubrication

Hockenheim Plant
2. Industriestrasse 4
68766 Hockenheim
Germany
Tel. +49 (0)62 05 27-0
Fax +49 (0)62 05 27-101
www.skf.com/lubrication

Table of contents

Information concerning Declaration of Conformity

The product "curve sensor control device" of the series

LCG2-A..., LCG2-B...

is hereby confirmed to comply with the requirements of the following standard:
DIN EN 50155:2008-03
Railway applications - Electronic equipment used on rolling stock
See the appendix to the Declaration of Conformity for the operating conditions under which the product complies with the standard DIN EN 50155:2008-03.

Notes:

(a) This declaration certifies compliance with the aforementioned standards, but does not constitute a guarantee of characteristics.

(b) The safety instructions in the documentation included with the product must be observed.

(c) The commissioning of the products here certified is prohibited until the machine, vehicle, or similar in which the product is installed conforms with the provisions and requirements of the applicable Directives.

(d) The operation of the products at non-standard supply voltage, as well as non-adherence to the installation instructions, can negatively impact the EMC characteristics and electrical safety.

We further declare:

- The aforementioned product is, according to **EC Machinery Directive 2006/42/EC, Annex II Part B**, designed for installation in machinery/for incorporation with other machinery to form a machine. Within the scope of application of the EC Directive, commissioning shall be prohibited until the machinery in which this part is installed conforms with the provisions of this Directive.
- The aforementioned product may, with reference to **EC Directive 97/23/EC concerning pressure equipment**, only be used in accordance with its intended use and in conformity with the instructions provided in the documentation. The following must be observed in this regard:

The product is neither designed nor approved for use in conjunction with fluids of Group 1 (Dangerous Fluids) as defined in Article 2, Para. 2 of Directive 67/548/EEC of June 27, 1967.
The product is neither designed nor approved for use in conjunction with gases, liquefied gases, pressurized gases in solution, vapors, or such fluids whose vapor pressure exceeds normal atmospheric pressure (1013 mbar) by more than 0.5 bar at their maximum permissible temperature.
When used in conformity with their intended use, the products supplied by SKF Lubrication Systems Germany GmbH do not reach the limit values listed in Article 3, Para. 1, Clauses 1.1 to 1.3 and Para. 2 of Directive 97/23/EC. They are therefore not subject to the requirements of Annex 1 of the Directive. Consequently, they do not bear a CE marking in respect of Directive 97/23/EC. SKF Lubrication Systems Germany GmbH classifies them according to Article 3, Para. 3 of the Directive.

The Declaration of Conformity forms part of the product documentation and is supplied together with the product.

Explanation of symbols and signs

You will find these symbols, which warn of specific dangers to persons, material assets, or the environment, next to all safety instructions in these operating instructions.
Please heed these instructions and proceed with special care in such cases. Please forward all safety instructions to other users.

Instructions placed directly on the machines/ grease lubrication pump units, such as:

- ❍ Rotation arrows
- ❍ Labels for fluid connections

must be followed and kept in fully legible condition.

You are responsible!

Please read the assembly and operating instructions thoroughly and follow the safety instructions.

Hazard symbols

General hazard
DIN 4844-2-W000

Electrical voltage/current
DIN 4844-2-W008

Hot surface
DIN 4844-2-W026

Electrostatic sensitive components

Slipping hazard
DIN 4844-2-W028

Indicators used with safety instructions and their significance

Signal word	meaning
Danger!	Danger of bodily injury
Warning!	Danger of damage to property and the environment
Note!	Provides additional information

Informational symbols

Note

● Prompts an action

○ Used for itemizing

➔ Refers to other facts, causes, or consequences

☞ Provides additional information

Environmentally correct disposal

1. Safety instructions

The operator of the described product must ensure that the operating instructions are read and understood by all persons responsible for assembly, operation, maintenance, and repair of the product. The operating instructions must be kept readily available.

Note that the operating instructions form part of the product and must accompany the product if sold to a new owner.

The described product is manufactured in accordance with the generally accepted rules and standards of industry practice and with occupational safety and accident prevention regulations. Risks may, however, arise from its usage and may result in physical harm to persons or damage to other material assets. Therefore the product may only be used in proper technical condition and in observance of the operating instructions. In particular, any malfunctions which may affect safety must be remedied immediately.

In addition to the operating instructions, statutory regulations and other general regulations for accident prevention in the railway sector (railway regulations) and environmental protection must be observed and applied.

1.1 Intended use

The LCG2-Axx and LCG2-Bxx curve sensor control units are used exclusively to control centralized lubrication systems in rail vehicles. They are not suitable for handling safety-related functions or for detecting curves in connection with railway tilting systems. They are likewise unsuitable for use in aviation systems or for navigation in any type of vehicle or ships.
Any other usage is deemed non-compliant with the intended use.

Hazardous materials of any kind, especially the materials classified as hazardous by CLP Regulation EC 1272/2008 may only be used to fill SKF centralized lubrication systems and components and deliv-ered and/or distributed with the same after consulting with and receiving written approval from SKF.

The described products are neither designed nor approved for use in conjunction with gases, liquefied gases, pressurized gases in solution, vapors, or such fluids whose vapor pressure exceeds normal atmospheric pressure (1013 mbar) by more than 0.5 bar at their maximum permissible temperature.

Unless specially indicated otherwise, products from SKF Lubrication Systems Germany GmbH are not approved for use in potentially explosive areas as defined in the ATEX Directive 94/9/EC.

1.2 Authorized personnel

Only qualified technical personnel may install, operate, maintain, and repair the products described in the operating instructions. Qualified technical personnel are persons who have been trained, assigned, and instructed by the operator of the final product into which the described product is incorporated. Such persons are familiar with the relevant standards, rules, accident prevention regulations, and assembly conditions as a result of their training, experience, and instruction. They are authorized to identify and perform necessary actions while avoiding any risks which may arise.

The definition of qualified personnel and the prohibition against employing non-qualified personnel are laid down in DIN VDE 0105 and IEC 364.

1.3 Electric shock hazard

Electrical connections for the described product may only be established by qualified and trained personnel authorized to do so by the operator in observance of the local electrical operating conditions and local regulations (e.g., DIN, VDE). Serious injury or death and property damage may result from improperly connected products.

Danger!
Performing work on an energized pump or product may result in serious injury or death.
Assembly, maintenance, and repair work may only be performed on products that have been de-energized by qualified technical personnel. The supply voltage must be switched off before opening any of the product's components.

1.4 System pressure hazard

Danger!
Lubrication systems are pressurized during operation. Centralized lubrication systems must therefore be depressurized before starting assembly, maintenance or repair work, or any system modifications or system repairs.

Danger!
Do not spray people or animals with lubricants.

2. Transport, delivery, and storage

2.1 General information

SKF Lubrication Systems Germany GmbH products are packaged in accordance with standard commercial practice according to the regulations of the recipient's country and DIN ISO 9001. During transport, safe handling must be ensured and the product must be protected from mechanical effects such as impacts. The transport packaging must be marked "Do not drop!".

There are no restrictions for land, air, or sea transport.
After receipt of the shipment, the product(s) must be inspected for damage and for completeness according to the shipping documents. The packaging material must be preserved until any discrepancies are resolved.
SKF Lubrication Systems Germany GmbH products are subject to the following storage conditions:

2.2 Electronic and electrical devices

- Ambient conditions: Dry and dust-free surroundings, storage in well ventilated dry area
- Storage time: Max. 24 months
- Permissible humidity: < 65%
- Storage temperature: -40 °C to +85 °C
- Light: Avoid direct sun or UV exposure and shield nearby sources of heat

2.3 General notes

- The product(s) can be enveloped in plastic film to provide low-dust storage.
- Protect against ground moisture by storing on a shelf or wooden pallet.
- At approx. 6-month intervals: Check for corrosion. If there are signs of corrosion, reapply anti-corrosive agents.

3. Overview of device series

3.1 Distinguishing features

The major features distinguishing the LCG2-A and LCG2-B series are operating voltages, system design, and housing dimensions. Both series are available in three software versions:

- LCG2-A 01
- LCG2-A 02
- LCG2-A 03

- LCG2-B 01
- LCG2-B 02
- LCG2-B 03

(See Chapter 4.1, Table 1)

The software versions differ in terms of actuation of valve outlets A1 and A2 depending on the curve direction and direction of travel as well as in terms of the adjustment options for spray and interval times (see Chapter 4.2, Table 2).

3.2 LCG2-A (24 V DC design)

Components of the LCG2-A control unit series, Fig. 1

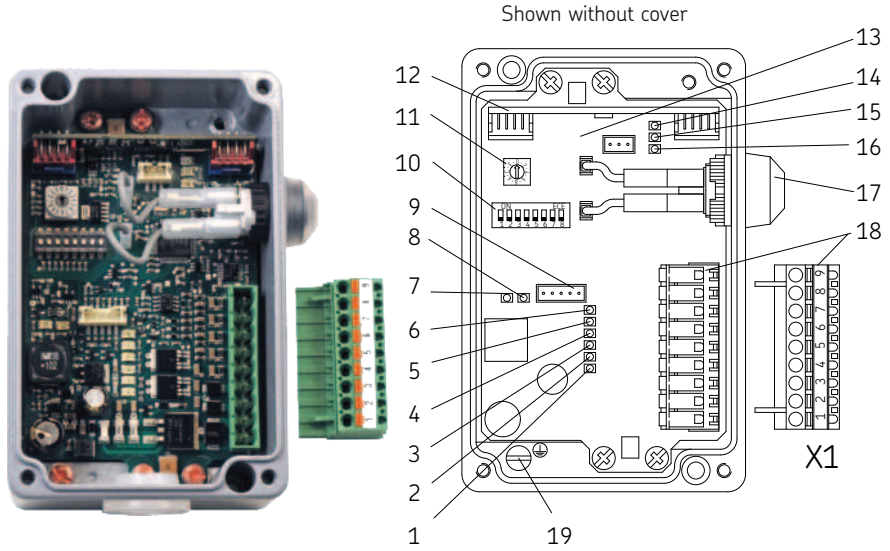

Legend to Fig. 1, Components and function of LCG2-A control unit

Item	Component		Function	
1	LED, green	Output A1	Valve output A1	(activated)
2	LED, green	Output A2	Valve output A2	(activated)
3	LED, yellow	Input FG	Spray enable	(activated)
4	LED, yellow	Input VR	Direction of travel 2	(activated)
5	LED, yellow	Input DK	Pushbutton DK (manual spray cycle triggering)	
6	LED, yellow	Input +P	Distance pulse signal, logical 1	
7	LED, green	Operating voltage	Operating voltage connected	
8	LED, red	Reset	Trigger program restart (temporary signal)	
9	Programming interface			
10	DIP switches 1 to 8	System configuration	Configuration of functional parameters	
11	Rotary switch (16-position)	Curve sensor configuration	Sensor activation and sensitivity configuration	
12	Sensor circuit board			
13	Main circuit board			
14	LED, red	Program start	Initialization complete (temporary signal)	
15	LED, yellow	Program start	Initialization complete (temporary signal)	
16	LED, green	Input +P/-P	Frequency-dependent spray enable	
17	Pushbutton DK		Manual spray cycle triggering	
18	Electrical plug connector X1		Socket for customer wiring	
19	Protective earth connector PE		Socket for customer wiring	

3.3 LCG2-B (72 V DC to 110 V DC design)

Components of the LCG2-B control unit, Fig. 2

Shown without cover

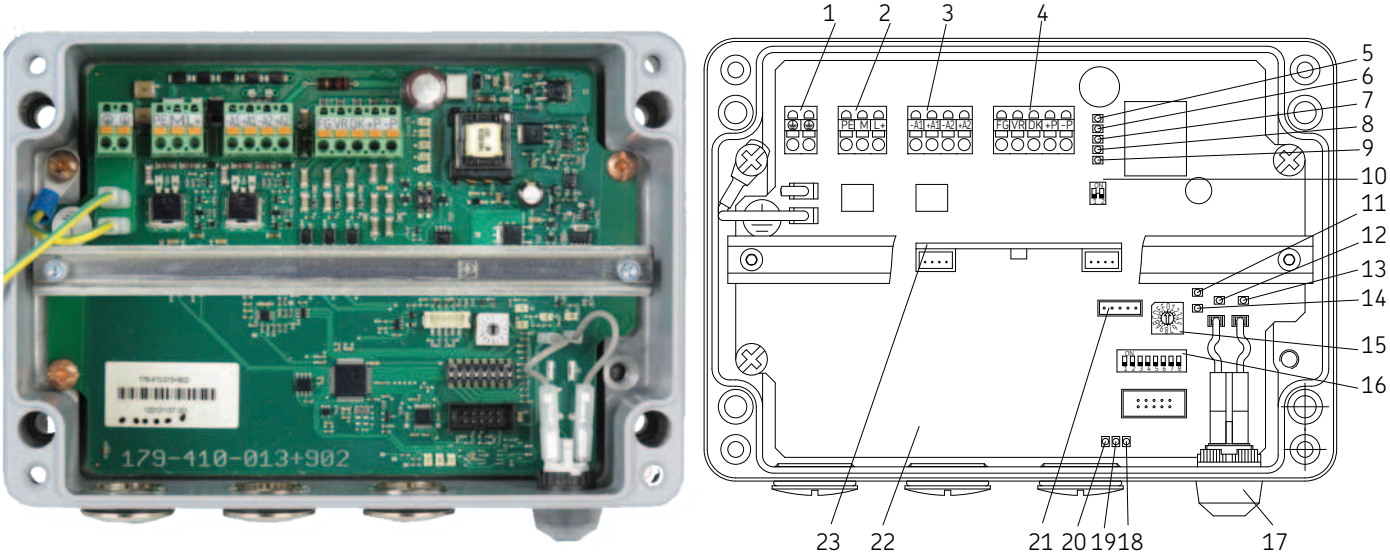

Legend to Fig. 2, Components and function of LCG2-B control unit

Item	Component		Function
1	Electrical plug connector X1	Valve outputs (PE conductor)	Socket for customer wiring
2	Electrical plug connector X2	Operating voltage input	Socket for customer wiring
3	Electrical plug connector X3	Valve outputs	Socket for customer wiring
4	Electrical plug connector X4	Control inputs	Socket for customer wiring
5	LED, green	Output A1	Valve output A1 (activated)
6	LED, green	Output A2	Valve output A2 (activated)
7	LED, yellow	Input FG	Spray enable (activated)
8	LED, yellow	Input VR	Direction of travel 2 (activated)
9	LED, yellow	Input DK	Pushbutton DK (manual spray cycle triggering)
10	DIP switches 9 and 10	Voltage range for input +P/-P	Adjustment to distance pulse generator
11	LED, yellow	Input +P	Distance pulse signal, logical 1
12	LED, green	Operating voltage	Operating voltage connected
13	LED, red	Reset	Trigger program restart (temporary signal)
14	LED, yellow	Input +P	Distance pulse signal, logical 0
15	Rotary switch (16-position)	Curve sensor configuration	Sensor activation and sensitivity configuration
16	DIP switches 1 to 8	System configuration	Configuration of functional parameters
17	Pushbutton DK		Manual spray cycle triggering
18	LED, green	Input +P/-P	Frequency-dependent spray enable
19	LED, yellow	Program start	Initialization complete (temporary signal)
20	LED, red	Program start	Initialization complete (temporary signal)
21	Programming interface		
22	Main circuit board		
23	Sensor circuit board		

4. Design and function

The LGC2-A and LCG2-B curve sensor control units are used to control wheel flange and railhead lubrication systems. In these systems, the lubricant is sprayed through spray nozzles onto the wheel flange of the rail vehicle or onto the head of the rail. The term "spraying" is therefore used in the description below.

As can be seen from the control units' electrical connection diagrams, the compressed air valves Y1 and Y2 are always connected via outputs A1 and A2. Where appropriate for clarity, the following description only mentions the corresponding valve, Y1 or Y2.
Additionally, for the sake of clarity the following text only indicates the software version numbers 01, 02, and 03 from the device order code (e.g., LCG2-A**xx**-XXX+924 or LCG2-B**xx**-XXX+902) because the corresponding functions of the LCG2-A and LCG2-B series are identical.

4.1 Design

The significant differences between the LCG2-A and LCG2-B series are in their housing dimensions, their design, and their operating voltage. Both series are available with software versions 01, 02, or 03.

Table 1

	LCG2-Axx-XXX+924	**LCG2-Bxx-XXX+902**
Rated operating voltage	24V DC	72 V to 110 V DC
Housing dimensions (width x height x depth) (without cable glands and pushbutton DK)	(80 x 125 x 58) mm See Fig. 6	(200 x 140 x 91) mm See Fig. 7
Design	See Fig. 1	See Fig. 2
Electrical connection diagram	See Fig. 10	See Fig. 11
Software versions	01, 02, 03	01, 02, 03

Adjustment elements of LCG2-A, LCG2-B, Fig. 3

LCG2-A

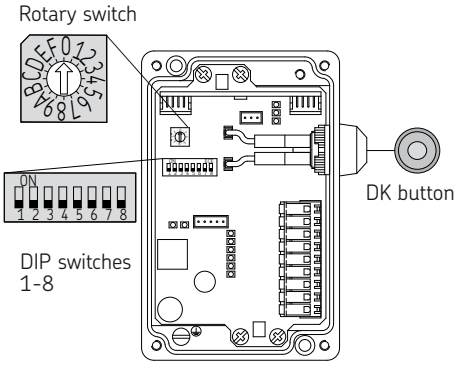

LCG2-B

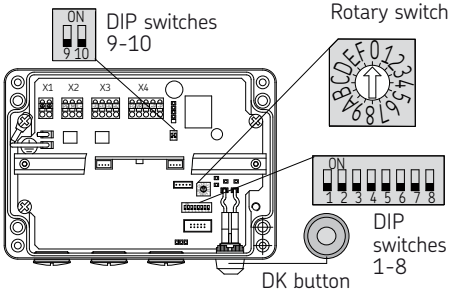

Legend to Fig. 3, *see page 40 for further information*

Rotary switch (see Chapter 4.2.2 for description and Chapter 6 for settings)

Deactivation, activation, and sensitivity setting of curve sensor

DIP switches 1 to 8

Settings for operating mode and other functional parameters

S-1 - Preselection for time- or distance-dependent spraying

S-2 - Curve sensor special mode

S-3 - Sets spray interval time t_p for curve-dependent spraying (only on software versions 01 and 02)

- Sets spray time t_s (only on software version 03)

S-4 - Sets spray interval time t_p for curve-dependent spraying

S-5 to **S-8** - Deactivates or activates operating mode preselected with DIP-1 by configuring the spraying duration for time- or distance-dependent spraying

DIP switches 9 to 10 (see Chapter 6 for settings)

Switches voltage range of distance pulse input +P/-P(only on LCG2-B)

DK button

- Manually triggers a spray cycle
- Manually triggers a series of spray cycles to vent the lubricant lines (e.g., during commissioning; see page 39, Table 3)

4.2 Function

Table 2

Chapter	Operating modes/features	Software versions		
		01	02	03
4.2.1	**Curve sensor special mode**	●	●	●
4.2.2	Curve-dependent spraying	●	●	●
4.2.3	Curve-dependent spraying, outside curve (left **or** right)	●		
4.2.4	Curve-dependent spraying, both sides (left **and** right)		●	●
4.2.5	Adjustable spray interval time for curve-dependent spraying	●	●	●
4.2.7	Time-dependent spraying	●	●	●
	Time- and curve-dependent spraying	●	●	●
4.2.8	Distance-dependent spraying	●	●	●
	Distance- and curve-dependent spraying	●	●	●
4.2.9	Adjustable spray times			●
	Spray times for single-line system			●
	Spray times for dual-line system	●	●	

4.2.1 Curve sensor special mode

DIP switch 2
= **OFF**: Curve sensor control function (factory setting)
DIP switch 2
= **ON**: Curve sensor special mode

DIP switches, Fig. 4

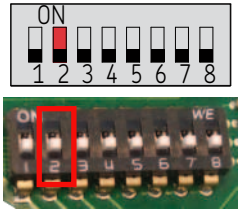

After switching to the curve sensor's special mode, the device functions as a "pure" curve sensor in that a continuous signal instead of a spray cycle signal is issued on the respective valve output (A1 or A2) as long as a curve is being traveled and the preset curve signal threshold is exceeded (for the sensitivity setting, see Table "D" for the respective software version (01, 02, or 03) as well as operating mode "Curve-dependent spraying").

No further enabling signal is required to issue the continuous signal. This function is, however, only intended for an application in which all other functions are handled by another control unit, for example a stored-program controller (SPC) already installed in the vehicle, or the SKF IG665+924 control unit (only available in 24 V DC), which comes with additional functions beyond the control unit models described here, such as compressor control for compressed air generation (control and monitoring), lubricant monitoring (fill level and pressure), special lubricant pump control, etc.

The DK pushbutton and the FG, VR, DK, and +P/-P control inputs, as well as DIP switches 1 and 3 to 8, have no function in the curve sensor's special mode.

The setting for DIP switch 2 is read and processed by the control unit only after a program restart.

4.2.2 Curve-dependent spraying/calibration

The curve sensor control units feature an internal sensor that directly detects the turning motion of the rail vehicle as it travels through a curve. The control unit evaluates the sensor signal; if an adjustable signal threshold is exceeded and the spray enable conditions are met, a spray cycle is triggered via the corresponding spray valve (Y1 or Y2). The spray valve cycles when there is an extended-duration curve signal (see adjustable spray interval time in 4.2.5 and spray time in 4.2.9).

Spray enable condition when using curve-dependent spraying:

- Enable input FG connected (switching contact FG closed)

Spray enable condition when using curve- and time-dependent spraying:

- Enable input FG connected (switching contact FG closed)

Spray enable conditions when using curve- and distance-dependent spraying:

- Enable input FG connected (switching contact FG closed)

and

- Pulse frequency at input +P/-P is greater than 3.5 Hz (minimum travel speed has been reached)

If only curve-dependent spraying is to be performed, the setting for DIP switch 1 must also be considered (see Spray enable conditions in 4.2.6).

The curve sensor function is activated (switch settings 1 to F) and deactivated (switch setting 0, factory setting) on the rotary switch.
The sensitivity of the curve sensor can be set (in angular degrees per second) using switch settings 1 to F as shown in the "D" tables in Chapter 6 for the respective software version (01, 02, or 03) as well as operating mode "Curve-dependent spraying."
If a time- or distance-dependent spray cycle is ongoing when a curve is detected, the spray cycle continues until completion. The curve-dependent spray cycle is eliminated or overridden.

Each time the operating voltage is switched on, a waiting period of 6 seconds is required for the automatic "curve zeroing" before the vehicle is moved.

Based on the type of curve sensor employed, the curve sensor control devices are designed for line profiles that on statistical average yield a straight line,i.e., the distribution of left and right curves must be approximately equal.
A microcontroller generates a moving median value from the sensor parameters for the straight lines and curves traveled. This value is used for continuous adjustment of the reference angular velocity of 0 degrees/s.Aging and temperature fluctuations in the sensor chip are also compensated for.

4.2.3 Curve-dependent spraying, outside curve

(software version 01)
In software version 01, only the spray nozzle (left or right) outside the curve is actuated during curve-dependent spraying. Each of the two spray nozzles is activated via a separate valve, Y1 or Y2. If the vehicle is operated in two directions, direction of travel input VR on the control unit must be connected (switching contact VR closed) when the vehicle moves in direction of travel 2 so that the spray nozzle outside the curve can be actuated in this situation (see Curve function, Fig. 5).

4.2.4 Curve-dependent spraying, both sides

(software versions 02 and 03)
In software versions 02 and 03, only valve Y1 is actuated during curve-dependent spraying in both curve directions; the valve then activates both spray nozzles (left and right). If the vehicle is operated in two directions, direction of travel input VR on the control unit does not necessarily need to be connected when the vehicle moves in direction of travel 2. If, however, spray nozzles on the other end of the vehicle are to be actuated, all spray cycles can be directed to valve Y2 by connecting direction of travel input VR (switching contact VR closed) (see Curve function, Fig. 5).

4.2.5 Setting spray interval time t_P for curve-dependent spraying

(software versions 01 and 02)
The spray interval time t_P for curve-dependent spraying is set using DIP switches 3 and 4 (see Table B on page 42).

(software version 03)
The spray interval time t_P for curve-dependent spraying is set using DIP switch 4 (see Table B on page 47).

Note
Setting the curve-dependent spray interval time t_P also defines the following times:

- In software versions 01, 02, 03:
  Minimum possible interval time for distance-dependent spraying if, for example, an excessively low number of pulses was preselected for the cycle duration.

- Only in software version 01:
  Spray interval time t_P when using time- or distance-dependent spraying between spray times tS of valves Y1 and Y2, which are actuated sequentially in this operating mode.

4.2.6 Time- or distance-dependent spraying

The operating modes and all other functional parameters are set using DIP switches 1 to 8 in accordance with the corresponding tables in Chapter 6 of these operating instructions.

DIP switch 1 defines a preselection for the following operating modes:

DIP switch 1
= **OFF**: Time-dependent spraying (factory setting)
DIP switch 1
= **ON**: Distance-dependent spraying

The preselected operating mode is only effectively activated once at least one of the DIP switches from 5 to 8 is switched to the ON position.

If only curve-dependent spraying is to be performed, DIP switches 5 to 8 remain in the OFF position (factory setting).

Spray enable conditions
Setting DIP switch 1 also defines the spray enable conditions irrespective of whether the preselected operating mode is activated using DIP switches 5 to 8:

DIP switch 1
= **OFF**: Spray enable only via input FG (factory setting)
DIP switch 1
= **ON**: Spray enable via input FG and minimum pulse frequency on input +P/-P

Spray cycle triggering in software version 01

A time- or distance-dependent spray cycle is performed in the sequence:
Spray time t_S for valve Y1 - spray interval time t_P - spray time t_S for valve Y2 – spray interval time ≥ t_P.

Spray cycle triggering in software versions 02 and 03

A time- or distance-dependent spray cycle is triggered based on the connection of direction of travel input VR:

Switching contact VR = open:
Spray time t_S for valve Y1 – spray interval time ≥ t_P

Switching contact VR = closed:
Spray time t_S for valve Y2 – spray interval time ≥ t_P

4.2.7 Time-dependent spraying

If time-dependent spraying is to be performed, the spraying duration in seconds is set using DIP switches 5 to 8 after preselection using DIP switch 1 (see 4.2.6) (see Table C for the respective software version (01, 02, or 03) as well as operating mode "Time-dependent spraying").

In order to better distribute the lubricant along the rail network, a random number generator defines an interval time in seconds between zero and the set spraying duration each time the operating voltage is connected on the curve sensor control unit. If all spray enable conditions are met, the operational sequence begins with this interval time; once this interval time has elapsed, the first time-dependent spray cycle (start of a spraying period according to set value in seconds) is performed.

Spray enable condition when using time-dependent spraying:

- Enable input FG connected (switching contact FG closed)

The interval time commences after the spray cycle. The interval time is derived from the set spraying duration (Table C) minus the spray time. The interval time is stopped if spray enable input FG is not connected to voltage (switching contact FG open). This may occur, for example, during very slow travel, when the vehicle is stationary, or during a braking or sanding procedure. If switching contact FG closes again, the interval time is continued. If the interval time is completed, a spray cycle is triggered. If switching contact FG opens during a spray cycle, the cycle still continues to completion.

To prevent time-dependent spraying when the vehicle is stationary, enable input FG must not be hard-wired to 24 V DC in this operating mode. There must be support for a signal from the vehicle control system which switches the spraying function on and off depending on the situation.

If the interval time elapses during a curve-dependent spray cycle, the cycle continues to completion and is followed by curve-dependent spray interval time t_P. The pending time-dependent spray cycle is performed immediately thereafter.

4.2.8 Distance-dependent spraying

If distance-dependent spraying is to be performed, the spraying duration in number of distance pulses is set using DIP switches 5 to 8 after preselection using DIP switch 1 (see 4.2.6) (see Table C for the respective software version (01, 02, or 03) as well as operating mode "Distance-dependent spraying").

For distance-controlled spraying, the devices feature pulse input +P/-P, which receives pulses from the vehicle's pulse generator proportional to the distance traveled. A spray cycle will be triggered once a set number of pulses has been received and the spray enable conditions are met.

Spray enable conditions when using distance-dependent spraying:

- Enable input FG connected (switching contact FG closed)

and

- Pulse frequency at input +P/-P is greater than 3.5 Hz (minimum travel speed has been reached)

In order to better distribute the lubricant along the rail network, a random number generator defines a number of pulses in seconds between zero and the set number of distance pulses each time the operating voltage is activated on the curve sensor control unit. The operational sequence begins at this number of pulses; once the number of pulses has been reached, the first distance-dependent spray cycle (start of a spraying period according to the set number of distance pulses) is performed.

The interval commences after the spray cycle; its duration is determined by the number of remaining pulses. Counting of the pulses is not stopped if one of the spray enable conditions is no longer met, for example due to excessively slow travel. The pulses will continue to be counted, but once the set number of pulses is reached the spray cycle will not be performed until both spray enable conditions are met.

If one or both spray enable conditions are no longer met during a spray cycle, the cycle still continues to completion.
If the interval elapses during a curve-dependent spray cycle, the cycle continues to completion and is followed by curve-dependent spray interval time t_P. The pending distance-dependent spray cycle is performed immediately thereafter.

The number of pulses to be set corresponds to a certain distance traveled. In order to determine this setting, the number of pulses issued per meter by the pulse generator must be known. Multiply this number by the desired number of meters traveled between sprayings. Then set the value in Table C that is closest to the resulting number.

Example calculation:
The pulse generator issues 2 pulses per meter. Spraying is to be performed approximately every 500 meters.
Calculation: 500 meters x 2 pulses/meter
Result: 1000 pulses

The closest setting for the number of pulses is thus 1125 pulses (corresponding to a distance of 562.5 meters).

When using a pulse generator, observe the electrical characteristics for input +P/-P (see Chapter 11.2) for the particular series.

Setting the spray interval time t_P for curve-dependent spraying (see 4.2.5) also defines the minimum spray interval time for distance-dependent spraying. This ensures that the minimum interval time for pressure relief between spray cycles is maintained if, for example, an excessively short distance was preselected and the vehicle speed and/or distance pulse frequency is too high.

4.2.9 Setting the spray time t_S

The spray time t_S can only be set in software version 03 using DIP switch 3 (see Chapter 6.3.1, Table B). In software versions 01 and 02, the spray time t_S is non-adjustable and set to 1.5 s.

4.2.10 Setting the pulse voltage range on LCG2-B

Input +P/-P can be adjusted to the voltage range of the distance pulse generator using DIP switches 9 and 10 (only available on LCG2-B; see Table E):

DIP switches 9 and 10
= **OFF**: Voltage range 20 V to 138 V

DIP switches 9 and 10
= **ON**: Voltage range 2 V to 20 V

If distance-dependent spraying is not to be performed, switches S9 and S10 must be set to OFF (factory setting).

4.3 Spray valve actuation based on curve direction and direction of travel

Spray valve actuation based on curve direction and direction of travel, Fig. 5

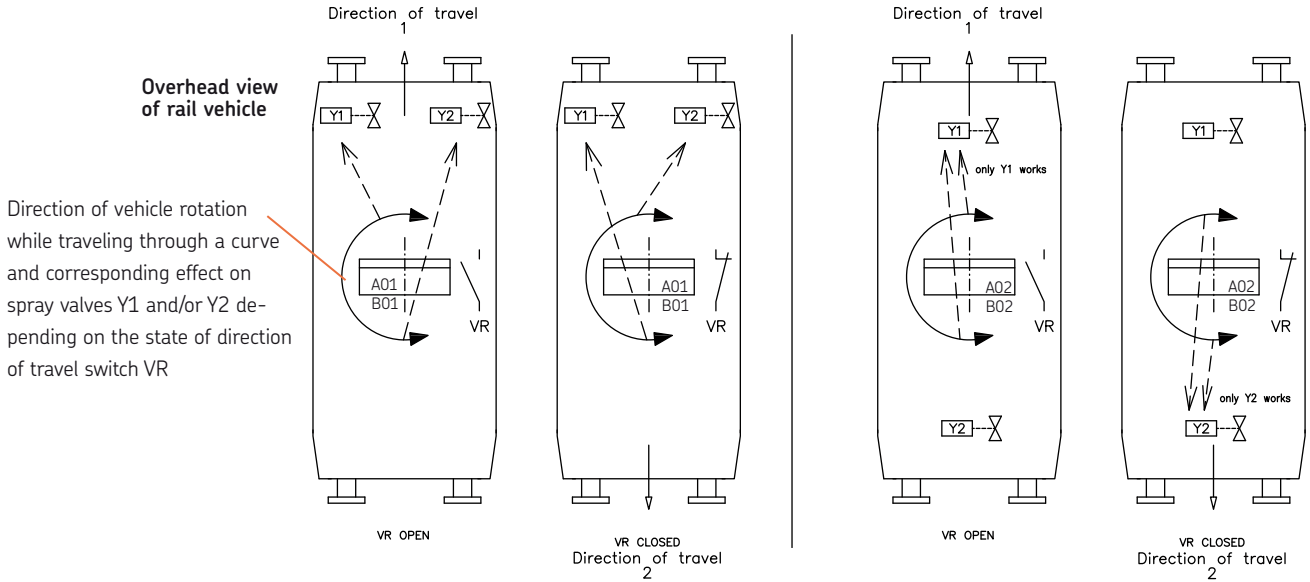

Software version 01
Curve-dependent spraying, outside curve, actuation of two spray nozzles (left or right) via two separate valves (Y1 or Y2)

Software versions 02 and 03
Curve-dependent spraying, actuation on both sides, from two spray nozzles (left and right) via one valve each

5. Assembly

5.1 General information

Only qualified technical personnel may install, operate, maintain, and repair curve sensor control units of series LCG2-A and LCG2-B . Qualified technical personnel are persons who have been trained, assigned, and instructed by the operator of the final product into which the described product is incorporated. Such persons are familiar with the relevant standards, rules, accident prevention regulations, and operating conditions as a result of their training, experience, and instruction. They are authorized to identify and perform necessary actions while avoiding potential risks.
The definition of qualified personnel and the prohibition against employing non-qualified personnel are laid down in DIN VDE 0105 and IEC 364.

Before assembling the curve sensor control units, the packaging material and any shipping braces must be removed. Keep the packaging material until any discrepancies have been resolved.

5.2 Setup and installation

The curve sensor control unit should be installed in a place protected from contamination, water splashes, and vibrations. It should be easily accessible so that all further installation work can be performed without difficulty and the control unit can be configured easily. Avoid installing the device on vibrating walls or components.

Mounting position per DIN EN 61373, Appendix C

- Within the vehicle body or an attached roof or underfloor container
- Do not install on the bogie!

Mounting position

- On a vertical wall in any direction
- Cable glands pointing down
- If curve-dependent spraying is not to be performed, horizontal installation is also possible

Assembly holes must be made according to the diagram later in this text (Chapter 5.3.2/ Chapter 5.3.3).
The design specifications and conditions of the rail vehicle manufacturer and the object must be observed!
During assembly and especially when drilling, always pay attention to the following:

- Ensure sufficient clearance under the device for subsequent laying of electrical lines. The minimum bending radii of the lines according to the manufacturer's specifications must be observed while doing so.
- Also ensure sufficient clearance for manual actuation in the area of the DK pushbutton.
- Existing supply lines must not be damaged by assembly work.
- Other units must not be damaged by assembly work.
- The product must not be installed within range of moving parts.
- The product must be installed at an adequate distance from sources of heat.

Electrical installation

- The rules for rail vehicles pursuant to DIN EN 50343 must be followed when installing the electrical lines.
- Flexible electrical conduits as well as cables and lines must be laid such that fluids flow past the screw unions.

Note!
On the curve sensor control unit's electrical connection, ensure that appropriate measures eliminate interference between signals due to inductive, capacitive, or electro-magnetic couplings.
Shielded cables must be used in places where electrical interference fields can distort signal transmissions despite separate laying of cables.
The rules and empirical values for "EMC-compliant" cabling must be taken into consideration.

5.3 Installation of LCG2-A and LCG2-B curve sensor control units

☞ See the following figures: Figure 6 for LCG2-A and Figure 7 for LCG2-B.

5.3.1 Mounting equipment

The curve sensor control unit is secured on the intended mounting location on the rail vehicle using hexagon socket screws.
Fastening materials to be provided by the customer:

Example:

- Hexagon socket screws:
  LCG2-A = DIN912-M4 -8.8 (2x)
  LCG2-B = DIN912-M6 -8.8 (4x)
- Washers (4x) (if required)
  LCG2-A = DIN 125-B4, 3 pcs. (2x)
  LCG2-B = DIN 125-B6, 4 pcs. (4x)
- Self-locking hexagon nuts (if required)
  LCG2-A = DIN985-M4-8 (2x)
  LCG2-B = DIN985-M6-8 (4x)

- Drill assembly holes in the mounting location according to the respective figures (Fig. 6 or Fig. 7); deburr and grind the assembly holes.

- Unscrew the cover screws (4x) on the cover of the curve sensor using a screwdriver (Phillips) and put them aside together with the cover.

Note!
The curve sensor control units contain electronic components that may be damaged or destroyed by inadvertent electrostatic charge and discharge (ESD). To prevent possible damage by ESD, personnel must discharge any electrostatic electricity on their hands and any tools on a bare, grounded point on the rail vehicle prior to performing any work in the area of the circuit board of the opened control unit. Conductors or component connections within the device must not be touched under any circumstances.

5.3.2 LCG2-A mounting diagram

- Insert fixing screws through the fixing holes on the control unit housing and the mounting location; gently tighten washers and self-locking nuts if necessary.

- Align the control unit housing.

Note!
Ensure that adequate torque is applied when installing the curve sensor control unit!

- Securely tighten the hexagon socket screws.

LCG2-A mounting diagram, Fig. 6

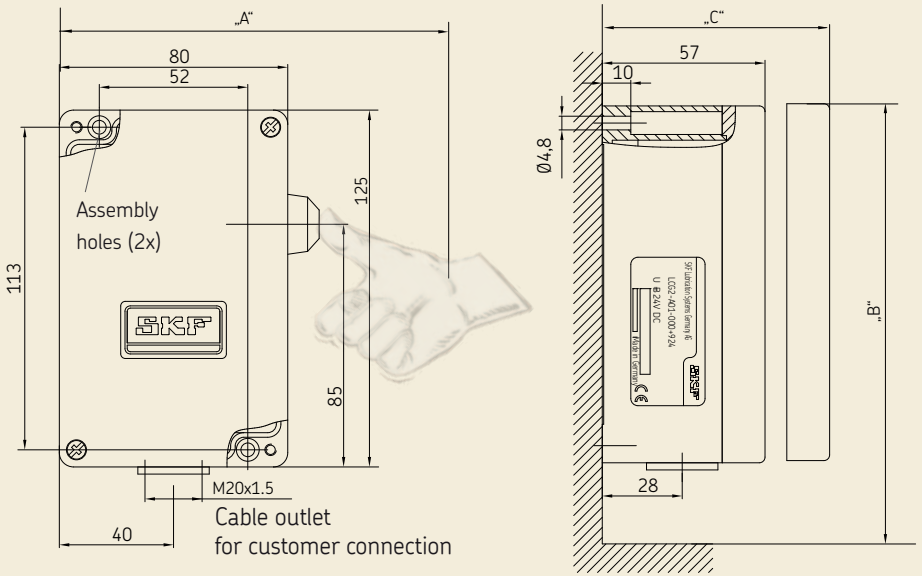

Minimum mounting dimensions

Minimum mounting dimensions A, B, and C are determined by the customer.

5.3.3 LCG2-B mounting diagram

LCG2-B mounting diagram, Fig. 7

Cable glands are not included in the delivery!

Assembly holes (4x)

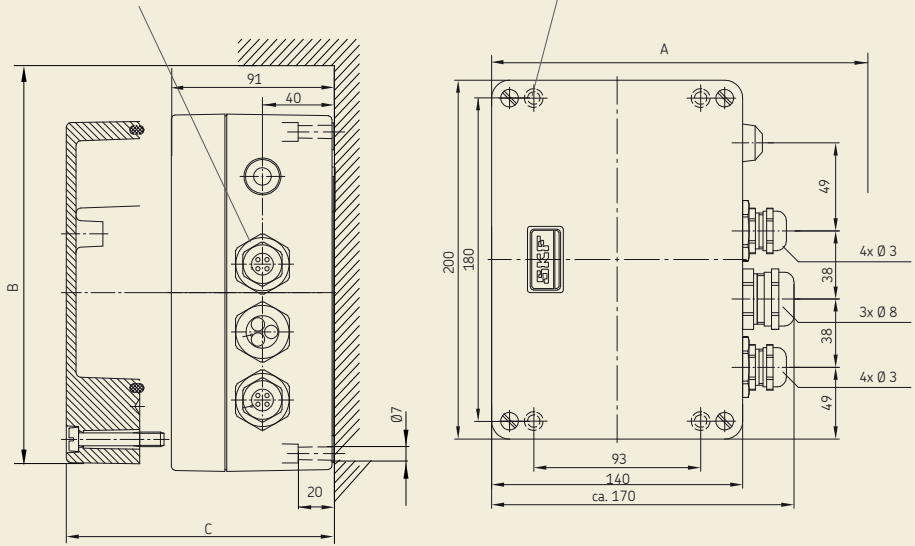

Minimum mounting dimensions

Minimum mounting dimensions A, B, and C are determined by the customer.

Note!
Shown rotated 90° relative to mounting position.

5.4 Electrical connection

Danger!
The mains voltage (supply voltage) must match the specifications on the rating plate of the curve sensor control unit. LCG2-A/B control units come with device protection. The customer must install line protection that is matched to the control unit's conductor cross-section, conductor length, power consumption, and protects against short-circuits. Bodily injury and property damage may result from incorrect dimensions.

5.5 Customer connection of LCG2-A

Danger!
Electrical connections for the product may only be established by qualified and trained personnel authorized to do so by the operator in observance of the local electrical operating conditions and local regulations (e.g., DIN, VDE). Serious injury or death and property damage may result from improperly connected products.

- Draw customer-supplied power leads into cable glands and wire them according to the connection diagram (Fig. 10).

Components of the LCG2-A control unit, Fig. 8

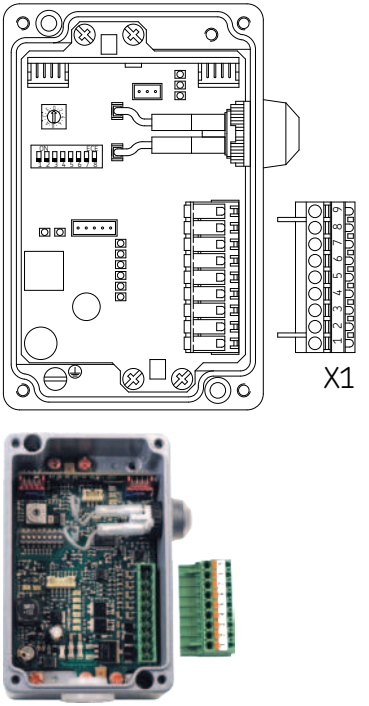

Pin assignment on terminal strip X1

Item		Description
	⏚	Protective earth conductor supply
1	L+	Operating voltage supply
2	M-	Minus supply (0 V)
3	A1	Output 1 for spray valve or for an additional control unit
4	A2	Output 2 for spray valve or for an additional control unit
5	FG	Input for spray enable
6	VR	Input for direction of travel 2
7	DK	Connection of external DK pushbutton for triggering lubrication cycle
8	+P	Pulse input, positive potential, opto-electrically isolated from operating voltage potential [1])
9	-P	Pulse input, negative potential, opto-electrically isolated from operating voltage potential [1])

1) Inputs +P/-P are used only in distance-dependent spraying.

5.6 Customer connection of LCG2-B

Components of the LCG2-B control unit, Fig. 9

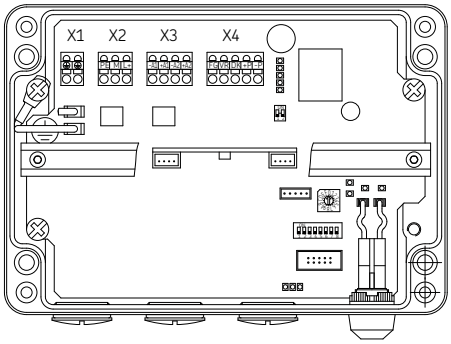

Pin assignment on terminal strip X1

Item	Description
⏚	PE output for spray valve Y1
⏚	PE output for spray valve Y2

Pin assignment on terminal strip X2

Item	Description
PE	Protective earth conductor supply
L+	Operating voltage supply
M-	Minus supply (0 V)

Pin assignment on terminal strip X3

Item	Description
-A1	OV output for spray valve Y1 or an additional control unit
+A1	Output for spray valve Y1 or an additional control unit
-A1	OV output for spray valve Y2 or an additional control unit
+A1	Output for spray valve Y2 or an additional control unit

Pin assignment on terminal strip X4

Item	Description
FG	Input for spray enable
VR	Input for direction of travel 2
DK	Connection of external DK pushbutton for triggering lubrication pulse
+P	Pulse input, positive potential, opto-electrically isolated from operating voltage potential [1])
-P	Pulse input, negative potential, opto-electrically isolated from operating voltage potential [1])

1) Inputs +P/-P are used only in distance-dependent spraying.

- Draw customer-supplied power leads into cable glands and wire them according to the connection diagram (Fig. 11).

5.6.2 Electrical connection illustration LCG2-A01; LCG2-A02; LCG2-A03

Connection illustration LCG2-A01; LCG2-A02; LCG2-A03, Fig. 10

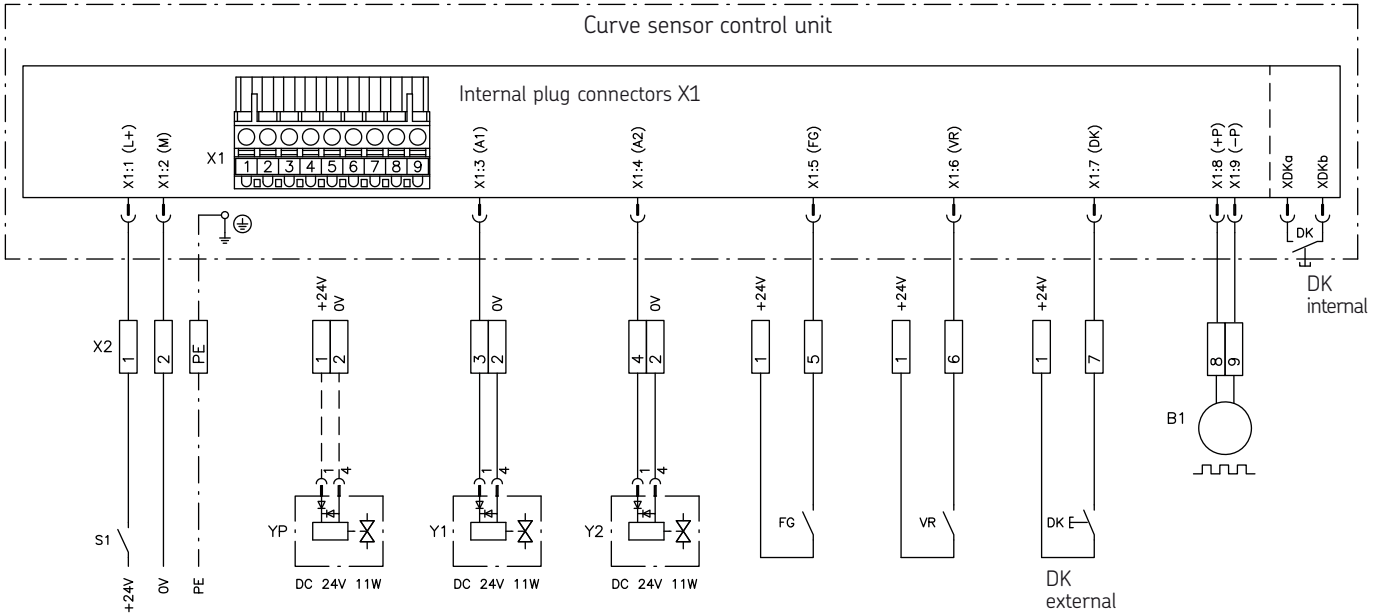

Legend to connection diagram for LCG2-A01; LCG2-A02; LCG2-A03

Description	Description	Control unit type	Function
S1	Switch		Voltage feed, S1 = ON at vehicle start-up Power supply: 24 V DC, 1.0 A
YP	Solenoid valve	All LCG2-A	Used only with a compression-loaded lubricant reservoir, 24 V DC, 11 W (optional)
Y1	Solenoid valve	LCG2-A01-000+924	Spraying, outside curve
		LCG2-A02-000+924 LCG2-A03-000+924	Spraying, direction of travel 1 (VR = OFF)
Y2	Solenoid valve	LCG2-A01-000+924	Spraying, outside curve
		LCG2-A02-000+924 LCG2-A03-000+924	Spraying, direction of travel 2 (VR = ON)
FG	Switch		Spray enabling, e.g., V > 5 km/h, contact position shown for spray cycle blocked (FG = OFF)
VR	Switch		Direction switching, contact position shown for direction of travel 1 (OFF)
DK	Button (internal, external)		Pushbutton for functional test of spray cycle
B1	Pulse generator		Pulse generator, used only in distance-dependent spraying

5.6.3 Electrical connection illustration LCG2-B01; LCG2-B02; LCG2-B03

Connection illustration LCG2-B01; LCG2-B02; LCG2-B03, Fig. 11

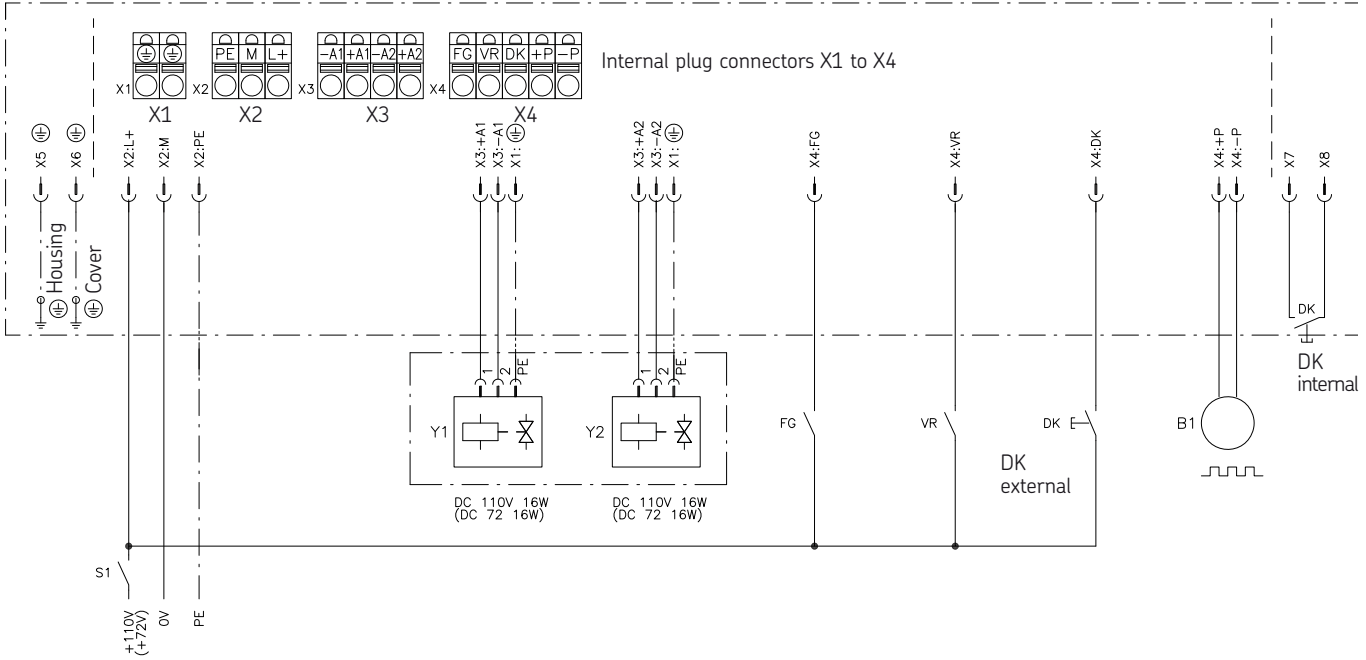

Legend to connection diagram for LCG2-B01; LCG2-B02; LCG2-B03

Description	Description	Control unit type	Function
S1	Switch		Voltage feed, S1 = ON at vehicle start-up Power supply: 110 V DC, 0.3 A 72 V DC, 0.4 A
Y1	Solenoid valve	LCG2-B01-000+902	Spraying, outside curve
		LCG2-B02-000+902 LCG2-B03-000+902	Spraying, direction of travel 1 (VR = OFF)
Y2	Solenoid valve	LCG2-B01-000+902	Spraying, outside curve
		LCG2-B02-000+902 LCG2-B03-000+902	Spraying, direction of travel 2 (VR = ON)
FG	Switch		Spray enabling, e.g., V > 5 km/h, contact position shown for spray cycle blocked (FG = OFF)
VR	Switch		Direction switching, contact position shown for direction of travel 1 (OFF)
DK	Button		Pushbutton for functional test of spray cycle
B1	Pulse generator		Pulse generator, voltage range selectable using DIP switches 9 and 10, used only in distance-dependent spraying

5.7 Curve function of LCG2-A../B.. curve sensors

Curve function, Fig. 12

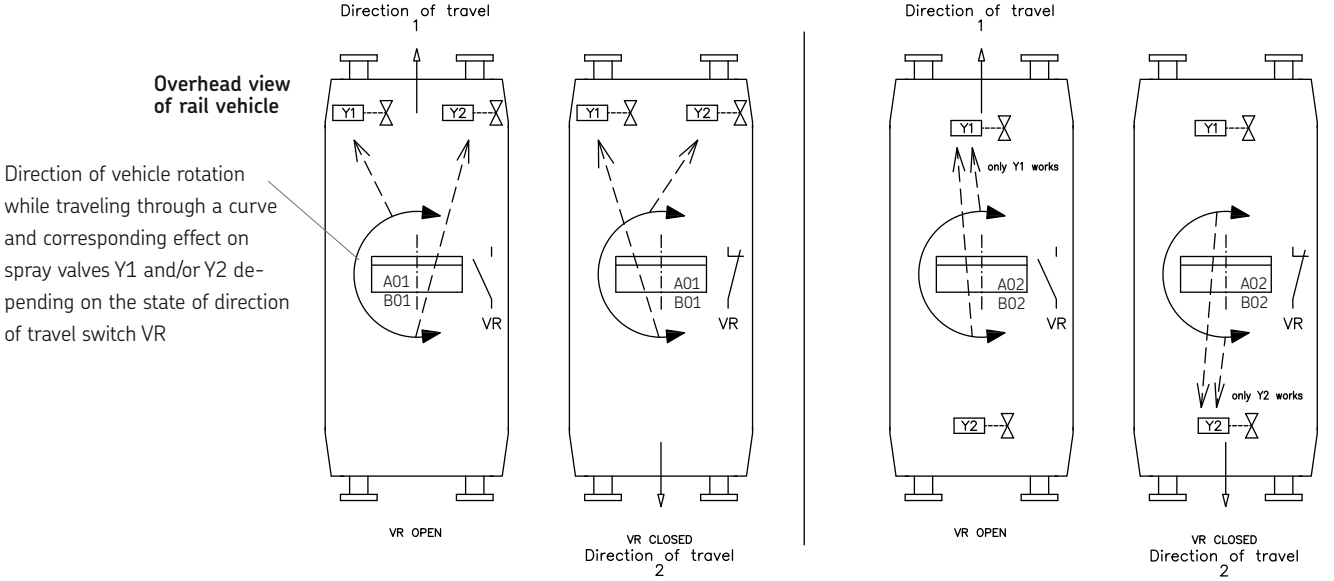

Software version 01
Curve-dependent spraying, outside curve, actuation of two spray nozzles (left or right) via two separate valves (Y1 or Y2)

Software versions 02 and 03
Curve-dependent spraying, actuation on both sides, from two spray nozzles (left and right) via one valve each

5.7.1 Using curve sensor LCG2-A01/ B01

Curve-dependent spraying, outside curve; actuation of two spray nozzles (left or right) via two separate valves (Y1 or Y2)

☞ See Figure 12, left column.

Note!
When the curve sensor function is used, ensure secure and error-free connection between the outputs A1 and A2 and the valves Y1 and Y2.

If only the wheels lying on the outside of the curve are to be sprayed when the vehicle travels through curves, direction of travel input VR must be connected, provided the vehicle can run in two directions. Figure 12 defines the vehicle's direction of travel, the curve directions, and the positions of the nozzles. Table 1 shows the actuation of valves Y1 and Y2 depending on the direction of travel and the curve traveled.

Switching mode of outputs A1 and A2 depending on direction of travel and curve orientation, Table 1

LCG2-A01/LCG2-B01					
Curve direction	VR	A1	Y1	A2	Y2
Right	0 V	24 V [1])	24 V [1])	0 V	0 V
Left	0 V	0 V	0 V	24 V [1])	24 V [1])
Right	24 V [1])	0 V	0 V	24 V [1])	24 V [1])
Left	24 V [1])	24 V [1])	24 V [1])	0 V	0 V

1) By version LCG2-B..., 72 VDC respectively 110 VAC).

Enable input FG

Input FG is used to enable the control unit to trigger a spray cycle. Spray cycles can be performed only when enable input FG is connected to 24 V DC [1]).

NOTE!
Enable input FG must not be hard-wired to 24 V DC [1]), as this would allow time-dependent spraying of the vehicle even when stationary or braking. There must be support for a signal from the vehicle control system which switches the spraying function on and off depending on the situation.

5.7.2 Using curve sensor LCG2-A02/A03/B02/B03

Curve-dependent spraying, both sides. Actuation of two spray nozzles (left and right) via one valve each.

☞ See Figure 12, right column.

Note!
When the curve sensor function is used, ensure secure and error-free connection between the outputs A1 and A2 and the valves Y1 and Y2.

The curve sensor control units of series LCG2-A or LCGB-2 listed in the heading are intended for lubrication systems in which all spray nozzles for a direction of travel are supplied by only one solenoid valve. Operation in two directions of travel is possible.

To allow for this, the active direction of travel is transmitted to the control unit via input VR (terminal strip X4) as follows:

Switching signal "0" (0 V) = Direction of travel 1
switching signal "1" (24V [1])) = Direction of travel 2

When the switching signal is "0", all curve- and distance- or time-controlled spray cycles are connected to output A1.

When the switching signal is “1”, all spray cycles are connected to output A2.
See Figure 12 and Table 2.
All other functions and characteristics are identical with those of the LCG2-A01; -B01.

Switching mode of outputs A1 and A2 depending on direction of travel and curve orientation, Table 2

LCG2-A02, A03/LCG2-B02, B03					
Curve direction	VR	A1	Y1	A2	Y2
Right	0 V	24 V [1])	24 V [1])	0 V	0 V
Left	0 V	24V [1])	24 V [1])	0 V	0 V
Right	24 V [1])	0 V	0 V	24 V [1])	24 V [1])
Left	24 V [1])	0 V	0 V	24 V [1])	24 V [1])

1) By version LCG2-B..., 72 VDC respectively 110 VAC).

6. Operation

6.1 Adjustment elements of the curve sensor control units

Adjustment elements of LCG2-A, LCG2-B, Fig. 13

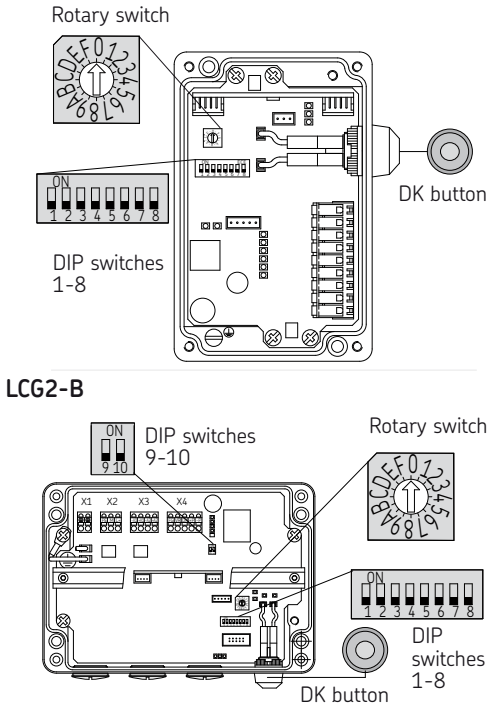

Legend to Fig. 13

Rotary switch (see Chapter 4.2.2 for description)
Deactivation, activation, and sensitivity setting of curve sensor

DIP switches 1 to 8
Settings for operating mode and other functional parameters

S-1 - Preselection for time- or distance-dependent spraying
S-2 - Curve sensor special mode
S-3 - Sets spray interval time t_p for curve-dependent spraying (only on software versions 01 and 02)
- Sets spray time t_s (only on software version 03)
S-4 - Sets spray interval time t_p for curve-dependent spraying

S-5 to **S-8** - Deactivates or activates operating mode preselected with DIP-1 by configuring the spraying duration for time- or distance-dependent spraying

DIP switches 9 to 10
Switches voltage range of distance pulse input +P/-P (only on LCG2-B)

DK button
- Manually triggers a spray cycle
- Manually triggers a series of spray cycles to vent the lubricant lines (e.g., during commissioning; see page 39, Table 3)

Pushbutton DK has several functions:
It can be used to trigger an interim lubrication. To do so, press the DK pushbutton briefly (< 1 s) once. The two outputs A1 and A2 are activated consecutively.
Button DK is also used to vent the lubrication lines, for example during commissioning (Table 3).

Example of operational sequence for venting lubricant lines, Table 3

Step	DK button actuation duration	Condition	Function triggered
1	**> 3s** < 3s < 3s	During normal operation During the 10 Y1 spray cycles After termination of Y1 spraying	10 Y1 spray cycles Termination of Y1 spraying 10 Y1 spray cycles
2	**> 3s** < 3s < 3s < 3s < 3s	After the 10 Y1 spray cycles After the 10 Y2 spray cycles During the 10 Y2 spray cycles after termination of Y2 spraying During the 10 Y2 spray cycles	10 Y2 spray cycles 10 Y2 spray cycles Termination of Y2 spraying 10 Y2 spray cycles Termination of Y2 spraying
3	**> 3s**	After termination of Y2 spraying or 10 Y2 spray cycles	Triggers an interim lubrication and switches over to normal operation.

Note:
If pushbutton DK is not pressed for a time exceeding 60 s during or after the procedure, the control unit automatically returns to normal operation.

Adjustment elements, Fig. 14

DIP switches S1 to S8
for setting operating mode
and all other functional parameters

DIP switches S9/S10 (only on LCG2-B)
These only need to be set if using the distance-dependent spraying function.

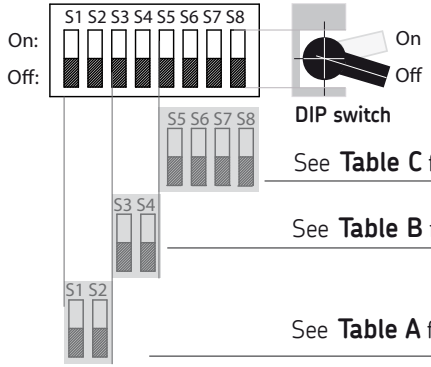

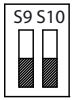

See **Table E** for settings

For voltage switch-over of pulse input +P/-P

See **Table C** for settings

Spraying duration in number of distance pulses (S1 = ON)
or:
Spraying duration in seconds (S1 = OFF)

See **Table B** for settings

Length of spray time t_s (only on design A03/B03)
Length of spray interval t_p when using curve-dependent spraying

See **Table A** for settings

Operating mode switch-over:
- **Time-dependent spraying (S1 = OFF)**
- **Distance-dependent spraying (S1 = ON)**

Rotary switch

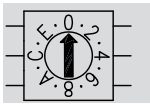

See **Table D** for settings

Deactivation, activation, and sensitivity setting of curve sensor
Deactivation: rotary switch position "0" (factory setting)

Note!
The device must be de-energized before setting parameters.

6.2 Operating modes of curve sensor control units LCG2-A01, -A02, -B01, -B02

Curve sensor sensitivity

The procedure for determining curve sensor sensitivity is identical on all relevant operating modes.
The curve sensor sensitivity can be set to position B (0.73°/s) for commissioning. A test run with various settings is recommended to determine whether there is a more suitable sensitivity for the route profile.

Table cells with a gray background are factory settings.

6.2.1 Curve-dependent spraying LCG2-A01, -A02, -B01, -B02

☞ In this application, DIP switches S9/S10 on the LCG2-B (Table E) are in the "OFF" position.

Table A

Operating mode	Switch position	
	[S1]	[S2]
	▮	▮

Table B

Spray interval time t_p [s]	Switch position	
	[S3]	[S4]
1.5	▮	▮
3.0	▮	▯
4.5	▯	▮
6.0	▯	▯

Table C

Spraying cycle duration [s]	Switch position			
	[S5]	[S6]	[S7]	[S8]
OFF	▮	▮	▮	▮

Table D

Curve sensitivity [Degree/s]	Rotary switch [Switch position]
Curve sensor deactivated	0
1.90	1
1.73	2
1.57	3
1.43	4
1.30	5
1.18	6
1.08	7
0.98	8
0.89	9
0.81	A
0.73	B
0.67	C
0.61	D
0.55	E
0.50	F

6.2.2 Time-dependent spraying LCG2-A01, -A02, -B01, -B02

☞ In this application, DIP switches S9/S10 on the LCG2-B (Table E) are in the "OFF" position.

Table A

Operating mode	Switch position	
	[S1]	[S2]
	▮□	▮□

Table B

Spray interval time t_p [s]	Switch position	
	[S3]	[S4]
1.5	□▮	□▮
3.0	□▮	▮□
4.5	▮□	□▮
6.0	▮□	▮□

Table C

Spraying cycle duration [s]	Switch position			
	[S5]	[S6]	[S7]	[S8]
OFF	□▮	□▮	□▮	□▮
10	□▮	□▮	□▮	▮□
12.5	□▮	□▮	▮□	□▮
16	□▮	□▮	▮□	▮□
20	□▮	▮□	□▮	□▮
25	□▮	▮□	□▮	▮□
32	□▮	▮□	▮□	□▮
40	□▮	▮□	▮□	▮□
50	▮□	□▮	□▮	□▮
65	▮□	□▮	□▮	▮□
80	▮□	□▮	▮□	□▮
100	▮□	□▮	▮□	▮□
125	▮□	▮□	□▮	□▮
156	▮□	▮□	□▮	▮□
195	▮□	▮□	▮□	□▮
244	▮□	▮□	▮□	▮□

Table D

Curve sensitivity [Degree/s]	Rotary switch [Switch position]
Curve sensor deactivated	0

6.2.3 Time- and curve-dependent spraying LCG2-A01, -A02, -B01, -B02

☞ In this application, DIP switches S9/S10 on the LCG2-B (Table E) are in the "OFF" position.

Table A

Operating mode	Switch position	
	[S1]	[S2]
	▫▪	▫▪

Table B

Spray interval time t_p [s]	Switch position	
	[S3]	[S4]
1.5	▫▪	▫▪
3.0	▫▪	▪▫
4.5	▪▫	▫▪
6.0	▪▫	▪▫

Table C

Spraying cycle duration [s]	Switch position			
	[S5]	[S6]	[S7]	[S8]
OFF	▫▪	▫▪	▫▪	▫▪
10	▫▪	▫▪	▫▪	▪▫
12.5	▫▪	▫▪	▪▫	▫▪
16	▫▪	▫▪	▪▫	▪▫
20	▫▪	▪▫	▫▪	▫▪
25	▫▪	▪▫	▫▪	▪▫
32	▫▪	▪▫	▪▫	▫▪
40	▫▪	▪▫	▪▫	▪▫
50	▪▫	▫▪	▫▪	▫▪
65	▪▫	▫▪	▫▪	▪▫
80	▪▫	▫▪	▪▫	▫▪
100	▪▫	▫▪	▪▫	▪▫
125	▪▫	▪▫	▫▪	▫▪
156	▪▫	▪▫	▫▪	▪▫
195	▪▫	▪▫	▪▫	▫▪
244	▪▫	▪▫	▪▫	▪▫

Table D

Curve sensitivity [Degree/s]	Rotary switch [Switch position]
Curve sensor deactivated	0
1.90	1
1.73	2
1.57	3
1.43	4
1.30	5
1.18	6
1.08	7
0.98	8
0.89	9
0.81	A
0.73	B
0.67	C
0.61	D
0.55	E
0.50	F

6.2.4 Distance-dependent spraying LCG2-A01, -A02, -B01, -B02

Table A

Operating mode	Switch position	
	[S1]	[S2]
	■□	□■

Table B

Spray interval time t_p [s]	Switch position	
	[S3]	[S4]
1.5	□■	□■
3.0	□■	■□
4.5	■□	□■
6.0	■□	■□

(on design LCG2-B01/-B02) **Table E**

Pulse generator Voltage range [V]V	Switch position	
	[S9]	[S10]
20.0 V to 138.0 V	□■	□■
2.0 V to 36.0 V	■□	■□

Table C

Number of pulses	Switch position			
	[S5]	[S6]	[S7]	[S8]
OFF	□■	□■	□■	□■
500	□■	□■	□■	■□
750	□■	□■	■□	□■
1125	□■	□■	■□	■□
1700	□■	■□	□■	□■
2125	□■	■□	□■	■□
3200	□■	■□	■□	□■
4800	□■	■□	■□	■□
7200	■□	□■	□■	□■
10800	■□	□■	□■	■□
16200	■□	□■	■□	□■
24300	■□	□■	■□	■□
36450	■□	■□	□■	□■
54675	■□	■□	□■	■□
82000	■□	■□	■□	□■
123000	■□	■□	■□	■□

Table D

Curve sensitivity [Degree/s]	Rotary switch [Switch position]
Curve sensor deactivated	0

6.2.5 Distance- and curve-dependent spraying LCG2-A01, -A02, -B01, -B02

Table A

Operating mode	Switch position [S1]	Switch position [S2]
	■	□

Table B

Spray interval time t_p [s]	Switch position [S3]	Switch position [S4]
1.5	□	□
3.0	□	■
4.5	■	□
6.0	■	■

(on design LCG2-B01/-B02) **Table E**

Pulse generator Voltage range [V]	Switch position [S9]	Switch position [S10]
20.0 to 138.0	□	□
2.0 to 36.0	■	■

Table C

Number of pulses	Switch position [S5]	Switch position [S6]	Switch position [S7]	Switch position [S8]
OFF	□	□	□	□
500	□	□	□	■
750	□	□	■	□
1125	□	□	■	■
1700	□	■	□	□
2125	□	■	□	■
3200	□	■	■	□
4800	□	■	■	■
7200	■	□	□	□
10800	■	□	□	■
16200	■	□	■	□
24300	■	□	■	■
36450	■	■	□	□
54675	■	■	□	■
82000	■	■	■	□
123000	■	■	■	■

Table D

Curve sensitivity [Degree/s]	Rotary switch [Switch position]
Curve sensor deactivated	0
1.90	1
1.73	2
1.57	3
1.43	4
1.30	5
1.18	6
1.08	7
0.98	8
0.89	9
0.81	A
0.73	B
0.67	C
0.61	D
0.55	E
0.50	F

6.3 Operating modes of curve sensor control units LCG2-A03, -B03

6.3.1 Curve-dependent spraying

☞ In this application, DIP switches S9/S10 on the LCG2-B03 (Table E) are in the "OFF" position.

Table A

Operating mode	Switch position	
	[S1]	[S2]
	□■	□■

Table B

Spray time t_s [s]	Switch position	
	[S3]	
5.0	□■	
8.0	■□	
Spray interval time t_p [s]		[S4]
7.0		□■
10.0		■□

Table C

Spraying cycle duration [s]	Switch position			
	[S5]	[S6]	[S7]	[S8]
OFF	□■	□■	□■	□■
20	□■	□■	□■	■□
25	□■	□■	■□	□■
32	□■	□■	■□	■□
40	□■	■□	□■	□■
50	□■	■□	□■	■□
64	□■	■□	■□	□■
80	□■	■□	■□	■□
100	■□	□■	□■	□■
130	■□	□■	□■	■□
160	■□	□■	■□	□■
200	■□	□■	■□	■□
250	■□	■□	□■	□■
312	■□	■□	□■	■□
390	■□	■□	■□	□■
488	■□	■□	■□	■□

Table D

Curve sensitivity [Degree/s]	Rotary switch [Switch position]
Curve sensor deactivated	0
1.90	1
1.73	2
1.57	3
1.43	4
1.30	5
1.18	6
1.08	7
0.98	8
0.89	9
0.81	A
0.73	B
0.67	C
0.61	D
0.55	E
0.50	F

6.3.2 Time-dependent spraying

☞ In this application, DIP switches S9/S10 on the **LCG2-A03, -B03** (Table E) are in the "OFF" position.

Table A

Operating mode	Switch position	
	[S1]	[S2]
	▂▅	▂▅

Table B

Spray time t_s [s]	Switch position	
	[S3]	
5.0	▂▅	
8.0	▅▂	
Spray interval time t_p [s]		[S4]
7.0		▂▅
10.0		▅▂

Table C

Spraying cycle duration [s]	Switch position			
	[S5]	[S6]	[S7]	[S8]
OFF	▂▅	▂▅	▂▅	▂▅
20	▂▅	▂▅	▂▅	▅▂
25	▂▅	▂▅	▅▂	▂▅
32	▂▅	▂▅	▅▂	▅▂
40	▂▅	▅▂	▂▅	▂▅
50	▂▅	▅▂	▂▅	▅▂
64	▂▅	▅▂	▅▂	▂▅
80	▂▅	▅▂	▅▂	▅▂
100	▅▂	▂▅	▂▅	▂▅
130	▅▂	▂▅	▂▅	▅▂
160	▅▂	▂▅	▅▂	▂▅
200	▅▂	▂▅	▅▂	▅▂
250	▅▂	▅▂	▂▅	▂▅
312	▅▂	▅▂	▂▅	▅▂
390	▅▂	▅▂	▅▂	▂▅
488	▅▂	▅▂	▅▂	▅▂

Table D

Curve sensitivity [Degree/s]	Rotary switch [Switch position]
Curve sensor deactivated	0

6.3.3 Time- and curve-dependent spraying

☞ In this application, DIP switches S9/S10 on the **LCG2-A03, -B03** (Table E) are in the "OFF" position.

Table A

Operating mode	Switch position	
	[S1]	[S2]
	▂▄	▂▄

Table B

Spray time t_s [s]	Switch position	
	[S3]	
5.0	▂▄	
8.0	▄▂	
Spray interval time t_p [s]		[S4]
7.0		▂▄
10.0		▄▂

Table C

Spraying cycle duration [s]	Switch position			
	[S5]	[S6]	[S7]	[S8]
OFF	▂▄	▂▄	▂▄	▂▄
20	▂▄	▂▄	▂▄	▄▂
25	▂▄	▂▄	▄▂	▂▄
32	▂▄	▂▄	▄▂	▄▂
40	▂▄	▄▂	▂▄	▂▄
50	▂▄	▄▂	▂▄	▄▂
64	▂▄	▄▂	▄▂	▂▄
80	▂▄	▄▂	▄▂	▄▂
100	▄▂	▂▄	▂▄	▂▄
130	▄▂	▂▄	▂▄	▄▂
160	▄▂	▂▄	▄▂	▂▄
200	▄▂	▂▄	▄▂	▄▂
250	▄▂	▄▂	▂▄	▂▄
312	▄▂	▄▂	▂▄	▄▂
390	▄▂	▄▂	▄▂	▂▄
488	▄▂	▄▂	▄▂	▄▂

Table D

Curve sensitivity [Degree/s]	Rotary switch [Switch position]
Curve sensor deactivated	**0**
1.90	**1**
1.73	**2**
1.57	**3**
1.43	**4**
1.30	**5**
1.18	**6**
1.08	**7**
0.98	**8**
0.89	**9**
0.81	**A**
0.73	**B**
0.67	**C**
0.61	**D**
0.55	**E**
0.50	**F**

6.3.4 Distance-dependent spraying

Table A

Operating mode	Switch position	
	[S1]	[S2]
	■	□

Table B

Spray time t_s [s]	Switch position	
	[S3]	
5.0	□	
8.0	■	
Spray interval time t_p [s]		[S4]
7.0		□
10.0		■

Table C

Number of pulses	Switch position			
	[S5]	[S6]	[S7]	[S8]
OFF	□	□	□	□
500	□	□	□	■
750	□	□	■	□
1125	□	□	■	■
1700	□	■	□	□
2125	□	■	□	■
3200	□	■	■	□
4800	□	■	■	■
7200	■	□	□	□
10800	■	□	□	■
16200	■	□	■	□
24300	■	□	■	■
36450	■	■	□	□
54675	■	■	□	■
82000	■	■	■	□
123000	■	■	■	■

Table D

Curve sensitivity [Degree/s]	Rotary switch [Switch position]
Curve sensor deactivated	0

(design LCG2-B03) **Table E**

Pulse generator voltage range [V]	Switch position	
	[S9]	[S10]
20.0 to 138.0	□	□
2.0 to 36.0	■	■

6.3.5 Distance- and curve-dependent spraying

Table A

Operating mode	Switch position	
	[S1]	[S2]
	■□	□■

Table B

Spray time t_s [s]	Switch position	
	[S3]	
5.0	□■	
8.0	■□	
Spray interval time t_p [s]		[S4]
7.0		□■
10.0		■□

(on design LCG2-B01/-B02) **Table E**

Pulse generator Voltage range [V]	Switch position	
	[S9]	[S10]
20.0 to 138.0	□■	□■
2.0 to 36.0	■□	■□

Table C

Number of pulses	Switch position			
	[S5]	[S6]	[S7]	[S8]
OFF	□■	□■	□■	□■
500	□■	□■	□■	■□
750	□■	□■	■□	□■
1125	□■	□■	■□	■□
1700	□■	■□	□■	□■
2125	□■	■□	□■	■□
3200	□■	■□	■□	□■
4800	□■	■□	■□	■□
7200	■□	□■	□■	□■
10800	■□	□■	□■	■□
16200	■□	□■	■□	□■
24300	■□	□■	■□	■□
36450	■□	■□	□■	□■
54675	■□	■□	□■	■□
82000	■□	■□	■□	□■
123000	■□	■□	■□	■□

Table D

Curve sensitivity [Degree/s]	Rotary switch [Switch position]
Curve sensor deactivated	0
1.90	1
1.73	2
1.57	3
1.43	4
1.30	5
1.18	6
1.08	7
0.98	8
0.89	9
0.81	A
0.73	B
0.67	C
0.61	D
0.55	E
0.50	F

7. Commissioning

7.1 Commissioning procedure

Before the product is commissioned, all electrical connections must be inspected.

Commissioning
Prior to commissioning, the centralized lubrication system must be vented as described in the system's operating instructions. Check the sensor control unit (LCG2-A/LCG2-B) for proper functioning using pushbutton DK as shown in the example in Chapter 6.1, Table 3.

The curve sensor sensitivity can be set to position B (0.73°/s) (factory setting) for commissioning. A test run with various settings is recommended to determine whether there is a more suitable sensitivity for the route profile.

8. Decommissioning and disposal

8.1 Temporary shutdown

The described product can be temporarily shut down by disconnecting the electrical supply connections. The safety instructions in these operating instructions must be observed when doing so. If the product will be shut down for an extended period of time, the instructions in Chapter 3, "Transport and storage," must be observed.

When recommissioning the product, follow the safety instructions in Chapter 2 and the parameter adjustments in Chapter 6.1.

8.2 Permanent shutdown

If the product will be permanently shut down, the local regulations and laws regarding the disposal of contaminated equipment must be observed.

Note!
Electronic components can contaminate soil and bodies of water.
Observe the local regulations and laws regarding the disposal of lubricants.

The product can also be returned to SKF Lubrication Systems Germany GmbH for disposal, in which case the customer is responsible for reimbursing the costs incurred.

The parts are recyclable.

9. Maintenance and service

Danger!
Performing work on products that have not been de-energized may result in serious injury or death. Assembly, maintenance, and repair work may only be performed on products that have been de-energized by qualified technical personnel. Supply voltage must be switched off before opening any of the product's components.
If required, first connect the protective earth conductor before beginning work.

Note!
The curve sensor control units contain electronic components that may be damaged or destroyed by inadvertent electrostatic charge and discharge (ESD). To prevent possible damage by ESD, personnel must discharge any electrostatic electricity on their hands and any tools on a bare, grounded point on the rail vehicle prior to performing any work in the area of the circuit board of the opened control unit. Conductors or component connections within the device must not be touched under any circumstances.

SKF Lubrication Systems Germany GmbH products are low-maintenance.
However, you should inspect the following at regular intervals to ensure proper function:

- No external damage
- Housing is firmly installed on the wall
- Cover is firmly closed
- All cables are securely connected
- Strain relief is firmly installed on cables and/or cable harnesses
- Corrosion or signs of fire
- Functional test using pushbutton DK with visual inspection of the spray pattern on the area to be sprayed on the wheel flange or the railhead

Dismantling of individual parts of the product is not permitted and voids any claims.

Only original spare parts from SKF Lubrication Systems Germany GmbH may be used. Unauthorized alterations to the product and the use of non-original spare parts and accessories are prohibited and nullify the statutory warranty.

SKF Lubrication Systems Germany GmbH shall not be held liable for damages resulting from improperly performed assembly, maintenance or repair work on the product.

If you encounter problems or have any questions, please contact our sales and service centers or our representatives abroad.
A list with current addresses is available on the Internet at:
www.skf.com/lubrication

10. Operational malfunctions

10.1 General information

The following table provides an overview of possible malfunctions and their causes. If you cannot remedy the malfunction, replace the curve sensor control unit. You can also contact the Service department of SKF Lubrication Systems Germany GmbH.

Dismantling of individual parts of the product within the warranty period is not permitted and voids any claims.

Note!
All actions such as repairs, parts replacement, etc. may only be performed by qualified and trained personnel.

Danger!
The power supply must be switched off prior to performing any repair or maintenance work. If required, first connect the protective earth conductor before beginning work.

Note!
The curve sensor control units contain electronic components that may be damaged or destroyed by inadvertent electrostatic charge and discharge (ESD). To prevent possible damage by ESD, personnel must discharge any electrostatic electricity on their hands and any tools on a bare, grounded point on the rail vehicle prior to performing any work in the area of the circuit board of the opened control unit. Conductors or component connections within the device must not be touched under any circumstances.

10.2 Troubleshooting

The main circuit board of the curve sensor control unit is equipped with LEDs which are assigned to the inputs and outputs (among other connections) and allow for quick inspection in case of malfunctions. If errors occur, first remove the device cover to localize a possible malfunction using the corresponding LEDs (see the LED functions in 3.2 for LCG2-A or 3.3 for LCG2-B).

Fault analysis and rectification

Fault	Possible cause	Remedy
No spraying occurs when pushbutton DK is actuated	o Curve sensor control unit is not connected to operating voltage	● Check power connection and replace back-up fuses (line protection) if necessary
No spraying occurs when pushbutton DK is actuated; operating voltage is connected	o Valve connection is faulty	● Inspect valve connection
	o Valve is defective	● Replace valve
	o Short-circuit in valve circuit	● Remedy short-circuit
	o DIP switch 2 is in ON position, which activates the curve sensor's special function	● If the curve sensor's special function is activated, pushbutton input DK does not function A manual spray cycle is then triggered via the additional control unit (see 4.2.1).
	o Pushbutton is defective	● Check pushbutton, replace if necessary
	o Curve sensor control unit is faulty	● Replace curve sensor control unit
The control unit does not always respond to actuation of pushbutton DK	o Spray interval time t_p has not ended since the most recent spray time.	● Wait for spray interval time t_p to end and then actuate pushbutton DK again

Fault analysis and rectification

Fault	Possible cause	Remedy
Spraying occurs when pushbutton DK is actuated but no lubricant discharges from the spray nozzle	o Lubricant lines are not completely filled with lubricant	● Vent lubricant lines (see Table 3 and system documentation)
	o Supply of lubricant is depleted	● Refill lubricant
	o No compressed air	● Provide compressed air
Curve-dependent spraying is not performed	o Curve sensor is not activated (rotary switch in position 0)	● Switch rotary switch for curve sensor to position > 0 (see 4.2.2)
	o The curve sensor's sensitivity is set too low	●Increase sensitivity of the curve sensor (see 4.2.2)
	o Spray enable signal is not activated on input FG	● Check whether the spray enable signal on input FG is functioning properly (see 4.2.2 and 4.2.6)
	o When DIP switch 1 is to set to ON, the spray enable frequency of ≥3.5 Hz on distance pulse input +P/-P was not reached	● DIP switch 1 only has to be in the ON position when using the distance-dependent spray function; otherwise, switch DIP switch 1 to the OFF position

Fault analysis and rectification

Fault	Possible cause	Remedy
Curve-dependent spraying is not performed	o Vehicle is traveling too slowly for the set curve sensor sensitivity or the curve radius is too large	● Readjust the sensitivity
Time-dependent spraying is not performed	o The time-dependent spray function is not preselected (DIP switch 1 in ON position) and/or is not activated (DIP switches 5 to 8 in OFF position)	● Preselect the time-dependent spray function (switch DIP switch 1 to the OFF position) and activate it (switch DIP switches 5 to 8 according to Table C for the particular model and set the operating mode to the ON position); see 4.2.6 and 4.2.7.
	o Spray enable signal is not activated on input FG	● Check whether the spray enable signal on input FG is functioning properly (see 4.2.2 and 4.2.6)
Distance-dependent spraying is not performed	o The distance-dependent spray function is not preselected (DIP switch 1 in OFF position) and/or is not activated (DIP switches 5 to 8 in OFF position)	● Preselect the distance-dependent spray function (switch DIP switch 1 to the ON position) and activate it (switch DIP switches 5 to 8 according to Table C for the particular model and set the operating mode to the ON position); see 4.2.6 and 4.2.8.

Fault analysis and rectification

Fault	Possible cause	Remedy
Distance-dependent spraying is not performed	o Spray enable signal is not activated on input FG	● Check whether the spray enable signal on input FG is functioning properly (see 4.2.2 and 4.2.6)
	o The spray enable frequency of ≥3.5 Hz on distance pulse input +P/-P was not reached	● Check whether pulses are being received on distance pulse input +P/-P and the spray enable frequency is reached
Instead of multiple consecutive curve-dependent spray cycles while traveling through a curve, only a continuous signal is issued via the corresponding valve output	o DIP switch 2 is in ON position, which activates the curve sensor's special function	● If this function is not desired, switch DIP switch 2 to the OFF position (see 4.2.1)

11. Technical data

11.1 General characteristics

General characteristics

	LCG2-A	LCG2-B
General characteristics - **Housing**		
Material	Aluminum	Aluminum
Weight	0.50 kg	1.84 kg
Dimensions (WxHxD) without cable glands and internal pushbutton DK	(80x125x57) mm	(200x140x91) mm
Fixing screws	2x M4	4x M6
Protection class acc. to DIN EN 60529 (when using suitable cable glands)	IP 65	IP 65
Mounting position	Vertical, cable glands pointing down	Vertical, cable glands pointing down
Threaded hole for cable gland	M20x1.5 (threaded hole is closed with blanking plug)	3x M25x1.5 (threaded holes are closed with screwed-in blanking plugs)

General characteristics

	LCG2-A	LCG2-B
Ambient conditions		
Temperature class acc. to DIN EN 50155: 2008-03	T1	T1
Working temperature range	-25 °C to 70 °C	-25 °C to 70 °C
Storage temperature range	-40 °C to 85 °C	-40 °C to 85 °C
Air humidity acc. to DIN EN 50125-1:2000-05	Corresponding to temperature class T1	Corresponding to temperature class T1
Altitude/air pressure acc. to DIN EN 50125-1:2000-05	Class A2 (up to 1000 m)	Class A2 (up to 1000 m)
Shock and vibration according to DIN EN 61373:2011-04	Category 1, classes A and B	Category 1, classes A and B

General characteristics

		LCG2-A	LCG2-B
Electrical connection			
Connection type		Spring-loaded terminals	Spring-loaded terminals
Conductor cross-section flexible without/with ferrule		0.5 to 2.5 mm^2	0.5 to 2.5 mm^2
Stripping length of conductors		10 mm	10 mm
Stripping length of conductors when connected to additional terminal 179-990-812 or 179-990-813 on mounting rail TS15			8 mm
Functional characteristics			
Curve sensor sensitivity		Approx. 0.5°/s to 1.9°/s, adjustable in 15 increments	Approx. 0.5°/s to 1.9°/s, adjustable in 15 increments
Spraying duration T for time-dependent spraying (depending on software version)	Software 01, 02	10 s to 244 s, adjustable in 15 increments	10 s to 244 s, adjustable in 15 increments
	03	20 s to 488 s, adjustable in 15 increments	20 s to 488 s, adjustable in 15 increments

General characteristics

		LCG2-A	LCG2-B
Spraying duration T for distance-dependent lubrication		500 to 123000 pulses, adjustable in 15 increments	500 to 123000 pulses, adjustable in 15 increments
Spray interval time t_P for curve-dependent spraying (depending on software version)	Software 01, 02	1.5 s / 3.0 s / 4.5 s / 6.0 s	1.5 s / 3.0 s / 4.5 s / 6.0 s
	03	7.0 s / 10.0 s	7.0 s / 10.0 s
Spray time t_S (depending on software version)	01, 02	1.5 s, non-adjustable	1.5 s, non-adjustable
	03	5.0 s / 8.0 s	5.0 s / 8.0 s
Spray interval time t_P for time- or distance-dependent spraying between delayed spray cycles on outputs A1 and A2 (only on software version 01)		1.5 s / 3.0 s / 4.5 s / 6.0 s	1.5 s / 3.0 s / 4.5 s / 6.0 s

11.2 Electrical characteristics

Electrical characteristics

	LCG2-A	LCG2-B
Power supply L+/ M		
Rated voltage U_N	24 V DC	72 V to 110 V DC
Minimum voltage	0.7 x U_N	0.7 x U_N
Rated operating voltage	1.15 x U_N	1.15 x U_N
Maximum voltage	1.25 x U_N	1.25 x U_N
Standby current consumption @ 1.15 UN (without output load)	Approx. 20 mA	Approx. 23 mA
Rated connected load (depends on output load; a max. of one output is activated in the software)	Approx. 0.5 W + output load	Approx. 3 W + output load
Device protection	Yes	Yes
Reverse voltage protection	Yes	Yes
Back-up fuse for line protection	Min. T 1 A, max. T 6 A	Min. T 1 A, max. T 2 A

Electrical characteristics

	LCG2-A	LCG2-B
Outputs A1, A2		
Switching output	Solid state switch, high-side	Solid state switch, high-side
Output voltage U_A	Operating voltage minus voltage drop ($U_A = U_B - U_F$)	Operating voltage minus voltage drop ($U_A = U_B - U_F$)
Voltage drop U_F	Approx. 70 mV @ I_L = 5 A	≤ 3 V @ I_L = 0.2 A
Max. output current (only in intermittent operation)	5 A	0.3 A
Max. output load (only in intermittent operation)	120 W	32 W
Overload protection	Yes	Yes
Short-circuit protection	Yes	Yes

Electrical characteristics

	LCG2-A	LCG2-B
Inputs FG, VR, DK		
Input voltage	24 V DC	72 V to 110 V DC
Input current	Approx. 8 mA	Approx. 2.7 mA to 4.2 mA
Input impedance	Approx. 3.3 kΩ	26 kΩ
Signal "1" level	≥ 12 V	≥ 30 V
Signal "0" level	≤ 3 V	≤ 2.5 V
Input +P/-P (optocoupler)		
Voltage range	2 to 30 V	20 to 138 V / 2 to 36 V
Input current	0.06 mA to 5.0 mA	0.6 mA to 12.5 mA/ 0.06 mA to 3.3 mA
Input impedance	Approx. 6 kΩ	Approx. 10 kΩ

Electrical characteristics

	LCG2-A	**LCG2-B**
Signal "1" level	≥ 2 V	≥ 15 V / ≥ 2 V
Signal "0" level	≤ 1 V	≤ 10 V / ≤ 1 V
Pulse duty factor	1:1	1:1
Max. pulse frequency [1])	2 kHz	300 Hz
Spray enable frequency	≥ 3.5 Hz	≥ 3.5 Hz
Standards		
Electronic equipment used on rolling stock	DIN EN 50155	DIN EN 50155

1) The source impedance of the pulse generator must be R_i ≤ 50 Ω in order to comply with the requirements for immunity under DIN EN 50121-3-2.

951-180-062-EN

All SKF products may be used only for their intended purpose as described in these operating instructions with associated operating instructions. If assembly/operating instructions are supplied together with the products, they must be read and followed. Not all lubricants can be fed using centralized lubrication systems. SKF can, on request, inspect the suitability of the lubricant selected by the user for pumping in centralized lubrication systems.

Lubrication systems and their components manufactured by SKF are not approved for use in conjunction with gases, liquefied gases, pressurized gases in solution, vapors, or such fluids whose vapor pressure exceeds normal atmospheric pressure (1013 mbar) by more than 0.5 bar at their maximum permissible temperature.

Hazardous materials of any kind, especially the materials classified as hazardous by CLP Regulation EC 1272/2008 may only be used to fill SKF centralized lubrication systems and components and deliv-ered and/or distributed with the same after consulting with and receiving written approval from SKF.

SKF Lubrication Systems Germany GmbH
Motzener Strasse 35/37 · 12277 Berlin · Germany
PO Box 970444 · 12704 Berlin · Germany
Tel. +49 (0)30 72002-0 · Fax +49 (0)30 72002-111
www.skf.com/lubrication

SKF Lubrication Systems Germany GmbH
2. Industriestrasse 4 · 68766 Hockenheim · Germany

Tel. +49 (0)62 05 27-0 · Fax +49 (0)62 05 27-101
www.skf.com/lubrication