Super-precision cylindrical roller bearings: High-speed

N 10 series

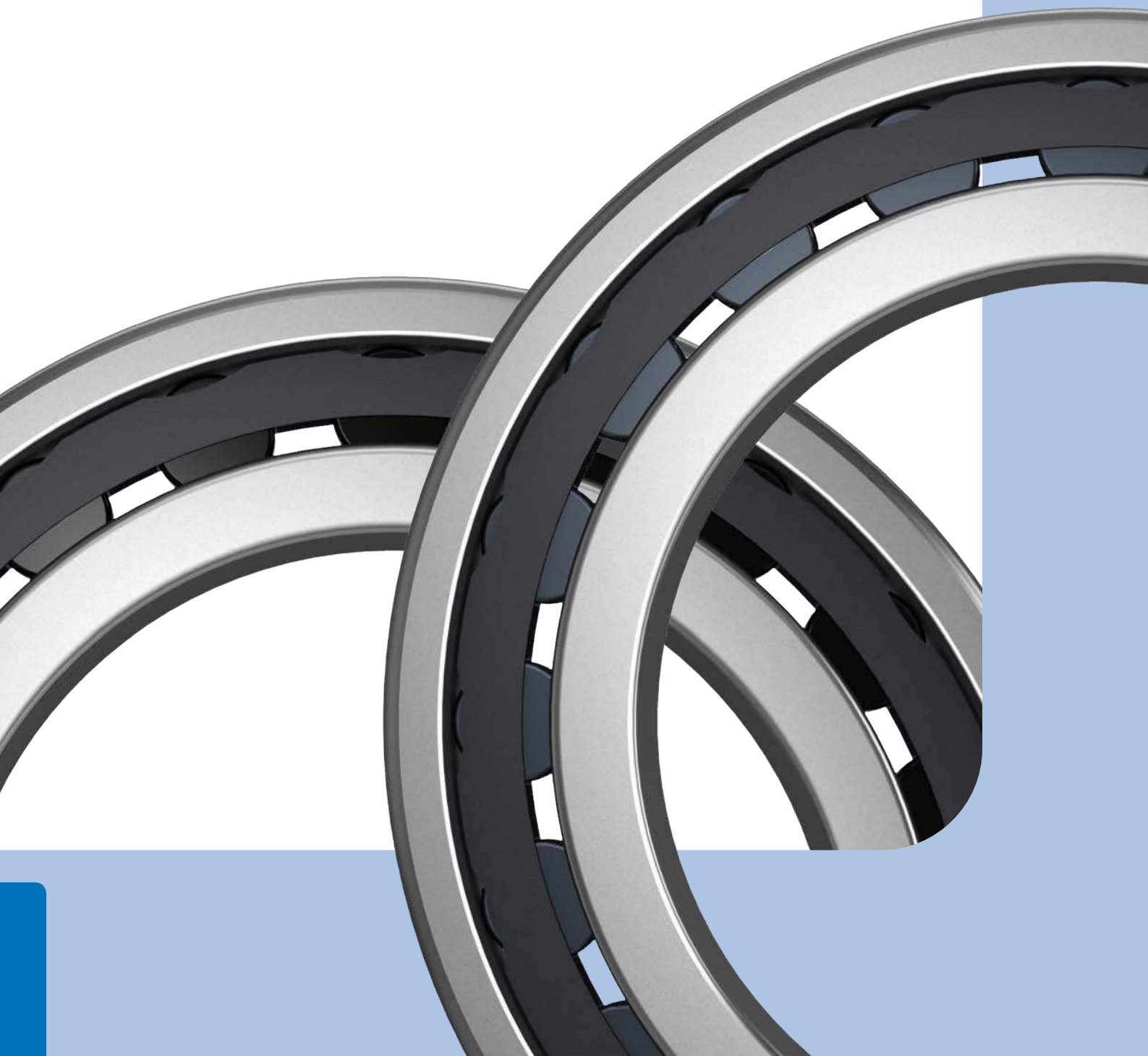

Contents

A Product information

B Recommendations

C Product data

D Additional information

High-speed super-precision single row cylindrical roller bearings

Machine tools and other precision applications require superior bearing performance. In these applications, a high degree of system rigidity is one of the main performance challenges, as the magnitude of elastic deformation under load determines the productivity and accuracy of the equipment. Another performance challenge is keeping the amount of friction and heat generated by the bearing to a minimum during high-speed operation.

To meet these demanding performance criteria, N 10 series cylindrical roller bearings have an optimized internal geometry and a redesigned cage, enabling them to accommodate a speed increase of up to 30%.

The bearings are characterized by:

- high-speed capability
- high load carrying capacity
- high stiffness
- low friction
- low cross sectional height

The non-locating bearing position is typically at the non-tool end of a spindle. If the bearing at this position has a loose fit, it can have a negative influence on the total rigidity of the bearing arrangement. Therefore, for a high degree of stiffness at the non-tool end of a spindle, N 10 series cylindrical roller bearings with a tapered bore should be used. They accommodate axial displacement within the bearing and enable an interference fit for both the inner and outer rings.

Bearings in the N 10 series provide high reliability and superior accuracy for applications such as high-speed milling machines, machining centres and lathes.

The assortment

SKF bearings in the N 10 series can accommodate shaft diameters ranging from 40 to 80 mm. The bearings are available with a tapered bore only and are manufactured to two tolerance classes. To accommodate increased operational speeds, the bearings are available in a hybrid variant.

The bearing overall dimensions are in accordance with ISO Dimension Series 10 and have a low cross sectional height. They are able to accommodate relatively large diameter shafts to provide the necessary system rigidity within a relatively small bearing envelope. When compared to a set of angular contact ball bearings with the same load carrying capacity and the same degree of rigidity, an N 10 series bearing requires a much smaller radial space. This enables compact spindle bearing arrangements.

Hybrid variant

Bearings in the N 10 series are available with ceramic (bearing grade silicon nitride) rollers. As ceramic rollers are considerably lighter and harder than steel rollers, hybrid bearings can provide a higher degree of rigidity and run considerably faster than comparably sized all-steel bearings. The lower weight of the ceramic rollers reduces the centrifugal forces within the bearing and generates less heat. Lower centrifugal forces are particularly important in machine tool applications where there are frequent rapid starts and stops. Less heat generated by the bearing means less energy consumption and longer bearing and grease service life.

Hybrid bearings in the N 10 series are identified by the designation suffix HC5.

The bearings are available in an all-steel and hybrid variant.

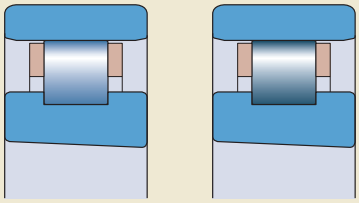

SKF super-precision single row cylindrical roller bearings: N 10 series

Features and benefits

- An inner ring with two integral flanges for roller guidance provides high load carrying capacity, high degree of rigidity.
- The improved internal geometry of the inner ring enables high-speed capability.
- An optimized PEEK cage accommodates high speeds and temperatures up to 150 °C.
- The optimized roller profile (hybrid bearings) enables high speeds, low levels of heat generation.
- ISO Dimension Series 10 enables compact bearing arrangements.
- The separable design facilitates mounting and dismounting.
- A tapered bore enables preload or clearance adjustments.
- A flangeless outer ring accommodates axial displacement, within the bearing, due to spindle elongation, and also enables an interference fit for both the inner and outer rings.

High-speed design

Super-precision single row cylindrical roller bearings in the N 10 series are designed for bearing arrangements requiring increased speed capability, high load carrying capacity and a high degree of radial stiffness.

The features of high-speed N 10 series bearings include, among others, an optimized internal geometry, a flangesless outer ring and a high-speed cage.

The bearings are separable, making it possible to separate the inner ring with roller and cage assembly from the outer ring to facilitate mounting and dismounting.

Optimized, high-speed cage

N 10 series bearings are equipped with an outer ring centred, window-type cage made of carbon fibre reinforced polyetheretherketone (PEEK). The symmetrical, self-centring design enables the cage to be better guided on the raceway of the outer ring, compared to previous designs. The cage also offers excellent guidance for the rollers and provides access for the lubricant (typically oil-air) to reach the contact areas between the cage and the inner ring flanges. The exceptional properties of PEEK provide a superior combination of strength and flexibility at high operational speeds. PEEK can also accommodate high operating temperatures while providing high wear resistance.

Compared to previous high-speed design bearings, the new, optimized cage can accommodate a speed increase of up to 30% in grease lubricated applications and up to 15% in oil-air lubricated applications.

High-speed design cylindrical roller bearing

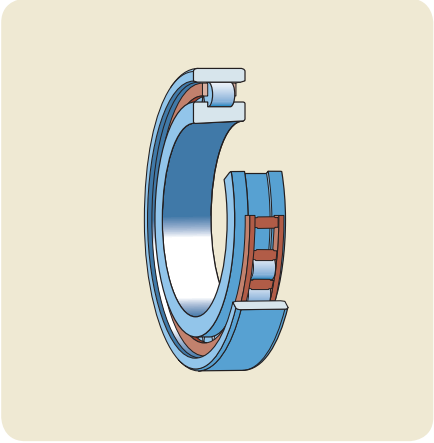

Comparison of attainable speeds – oil-air lubrication

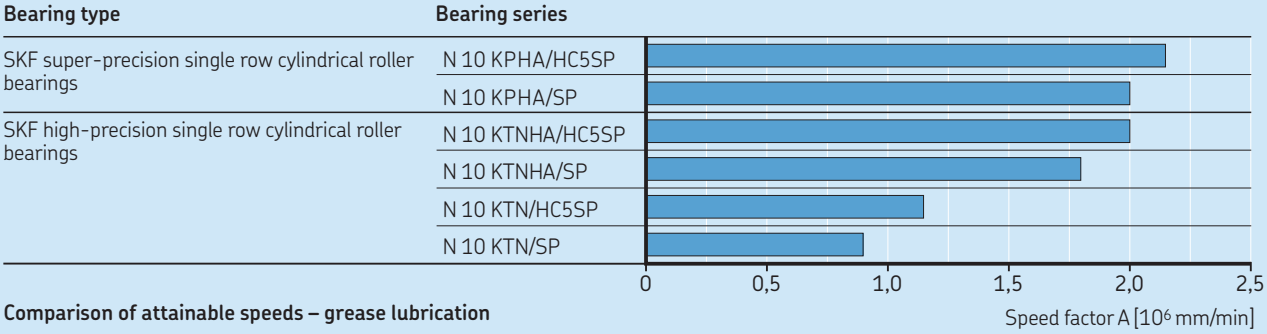

Comparison of attainable speeds – grease lubrication

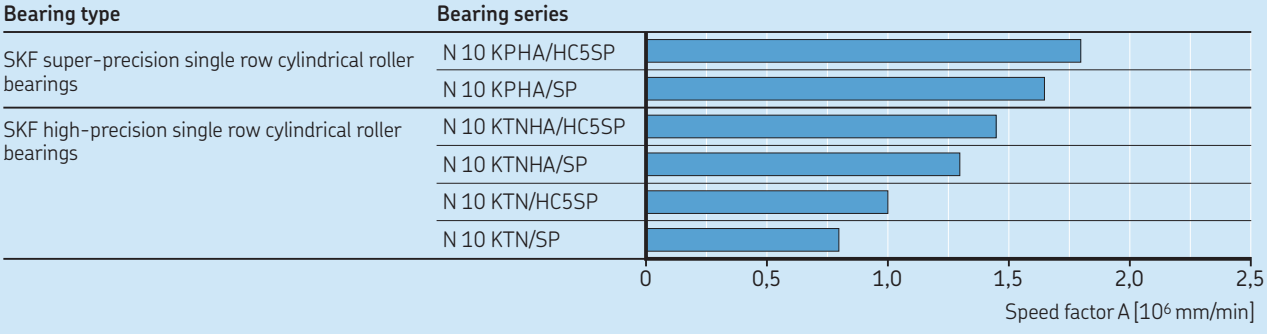

Applications

In applications requiring a high degree of system rigidity, cylindrical roller bearings are typically an excellent choice.

The SKF assortment of super-precision single row cylindrical roller bearings in the N 10 series is very well suited to meet this requirement as well as other demands placed on precision bearing arrangements.

High-speed milling machines and machining centres require high positioning accuracy and low levels of heat generation. In addition, these applications are often subjected to heavy radial loads at the non-tool end of the spindle. The ability of bearings in the N 10 series to accommodate heavy loads at high speeds, and still provide a high degree of radial stiffness, makes them an excellent solution for these and similar applications.

Applications
- Machine tools
- High-speed milling machines
- High-speed machining centres
- Lathe electro-spindles

Requirements
- High-speed capability
- High load carrying capacity
- High degree of system rigidity
- High positioning accuracy
- Long service life
- Low friction
- Increased machine uptime

Solution

SKF high-speed super-precision single row cylindrical roller bearings in the N 10 series

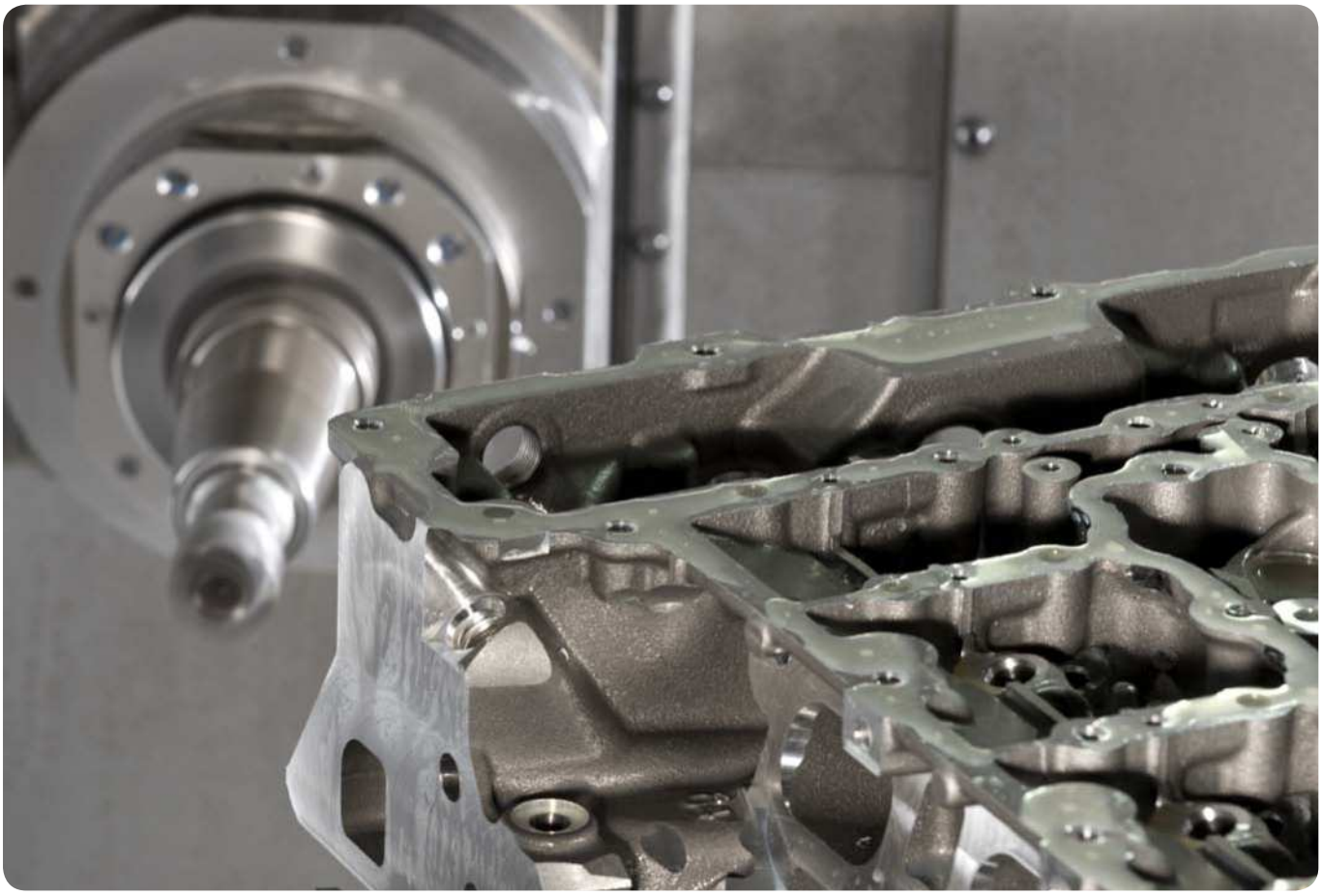

Adjusting for clearance or preload

When adjusting a cylindrical roller bearing with a tapered bore for clearance or preload, the result is determined by how far the bearing is driven up on the tapered shaft seat. The further the bearing is driven up the seat, the more the clearance is reduced, until eventually, there is preload in the bearing. To quickly and accurately determine the amount of clearance or preload in the mounted bearing, SKF recommends using a GB 30 series internal clearance gauge (→ **fig. 1**).

If SKF gauges are not available, the axial displacement, i.e. the additional distance through which the bearing inner ring must be pushed up on its tapered seat, can be calculated. For additional information, refer to the *SKF Interactive Engineering Catalogue* available online at www.skf.com.

Fig. 1

Preparing for oil injection

For bearings in the N 10 series, particularly the larger sizes, SKF recommends using the SKF oil injection method to facilitate mounting and dismounting. With this method, oil under high pressure is injected between the bearing inner ring bore and the shaft seat to form an oil film that separates the mating surfaces and appreciably reduces the friction between them. The distribution of oil between the mating surfaces is accomplished by a circumferential oil distribution groove in the shaft that communicates with a supply duct in the shaft (→ **fig. 1**).

It is necessary to make provision for the SKF oil injection method. This is usually done at the design stage of the bearing arrangement. For additional information about the SKF oil injection method and recommended dimensions for distribution grooves and oil supply ducts, refer to the *SKF Interactive Engineering Catalogue* available online at www.skf.com.

Fig. 1

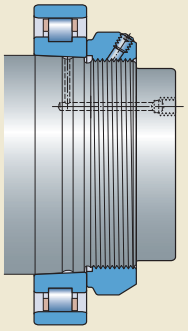

Application examples

High-speed super-precision single row cylindrical roller bearings are common in, but not limited to, machine tool applications. Depending on the type of machine tool and its intended purpose, spindles may require different bearing arrangements.

For high-speed machining centres and lathes, for example, there is typically a compromise between rigidity and load carrying capacity. In these applications, the spindle is often driven directly by a motor. The spindle is then referred to as a motorized spindle or electro-spindle. As there are only very light radial loads at the non-tool end (compared with a belt-driven spindle), but a high degree of rigidity is required, a super-precision single row cylindrical roller bearing is frequently used at that end. A cylindrical roller bearing at the non-tool end accommodates thermal elongation of the shaft within the bearing. Angular contact ball bearings at the tool end locate the shaft axially.

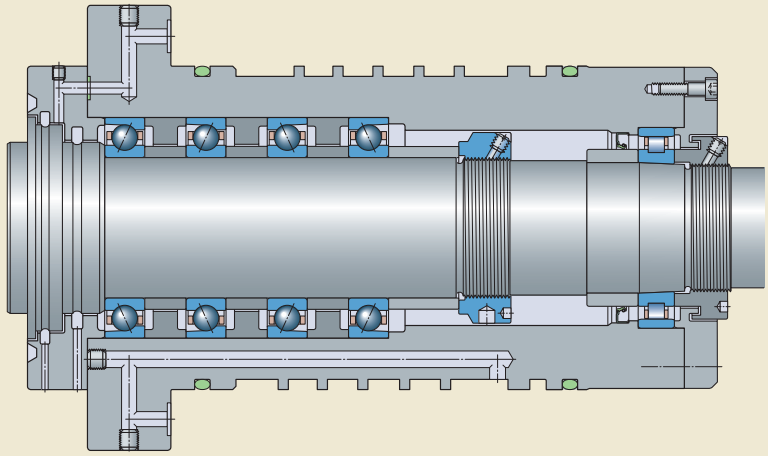

High-speed milling machine
For high-speed milling machines, where a high degree of system rigidity is required, a super-precision single row cylindrical roller bearing at the non-tool end, e.g. N 1013 KPHA/SP, is suitable. A matched set of four super-precision hybrid angular contact ball bearings, e.g. 7014 ACD/HCP4AQBCB, incorporating a set of precision-matched spacer rings, can be used at the tool end, providing an overall robust bearing arrangement.

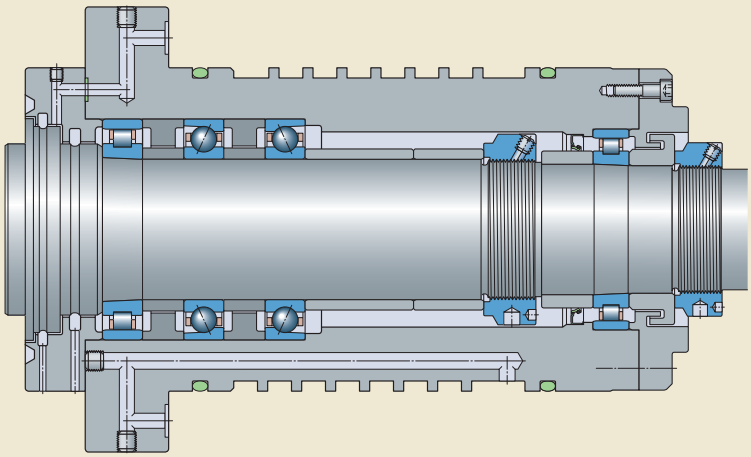

High-speed milling machine
In a high-speed milling machine where there are relatively heavy combined loads at the tool end, a high degree of rigidity and high load carrying capacity are important operational requirements. It is common to have a super-precision hybrid single row cylindrical roller bearing, e.g. N 1014 KPHA/HC5SP, in combination with a matched set of back-to-back super-precision hybrid angular contact ball bearings, e.g. 7014 ACD/HCP4ADBB, at the tool end. A super-precision hybrid single row cylindrical roller bearing, e.g. N 1013 KPHA/HC5SP, is suitable for the non-tool end.

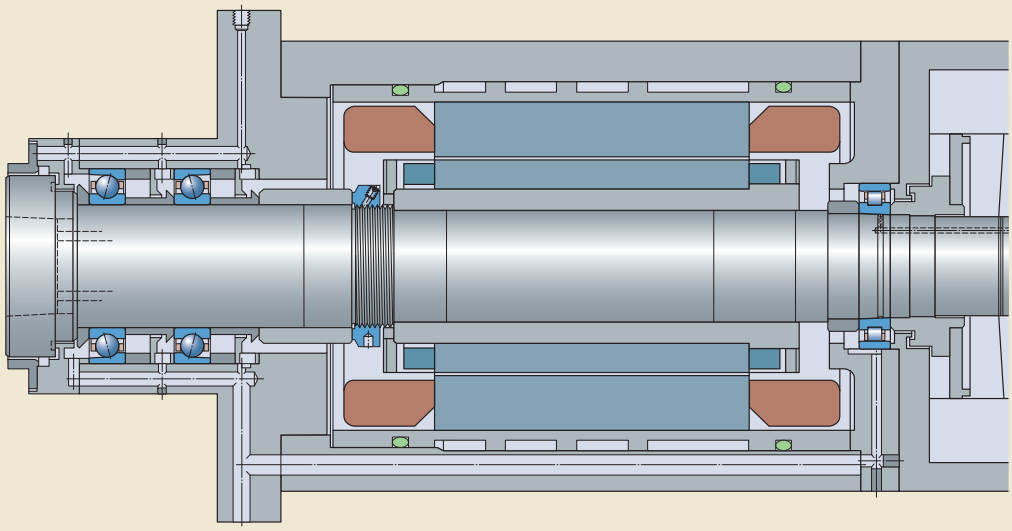

Electro-spindle for a high-speed machining centre
For high-speed machining centres where speeds can exceed 1 200 000 mm/min, a super-precision cylindrical roller bearing, e.g. N 1009 KPHA/SP, is used at the non-tool end. A matched set of super-precision angular contact ball bearings mounted back-to-back, e.g. 7012 CD/P4ADBB, are used at the tool end.

Lubrication

Heat resulting from friction is a constant threat to production equipment. One way to reduce heat and the wear associated with friction, particularly in bearings, is to be sure that the correct quantity of the appropriate lubricant reaches all necessary parts.

Grease lubrication

In most applications with bearings in the N 10 series, grease with a mineral base oil and lithium thickener is suitable. These greases, which adhere well to the bearing surfaces, can accommodate operating temperatures ranging from –30 to +100 °C.

Initial grease fill

In high-speed applications, less than 30% of the free space in the bearings should be filled with grease. The initial grease fill depends on the bearing size as well as the speed factor, which is

$$A = n\, d_m$$

where
A = speed factor [mm/min]
n = rotational speed [r/min]
d_m = bearing mean diameter
= 0,5 (d + D) [mm]

The initial grease fill can be estimated by

$$G = K\, G_{ref}$$

where
G = initial grease fill [cm^3]
K = a calculation factor dependent on the speed factor A (→ **diagram 1**)
G_{ref} = reference grease quantity (→ **table 1**) [cm^3]

Running-in of grease lubricated bearings

A grease lubricated super-precision bearing will initially run with a relatively high frictional moment. If the bearing is run at high speed without a running-in period, the temperature rise can be considerable. The time required to stabilize the operating temperature depends on a number of factors – the type of grease, the initial grease fill, how the grease is applied to the bearings and the running-in procedure.

For additional information about running-in of grease lubricated bearings, refer to the *SKF Interactive Engineering Catalogue* available online at www.skf.com.

Diagram 1

Factor K for initial grease fill estimation

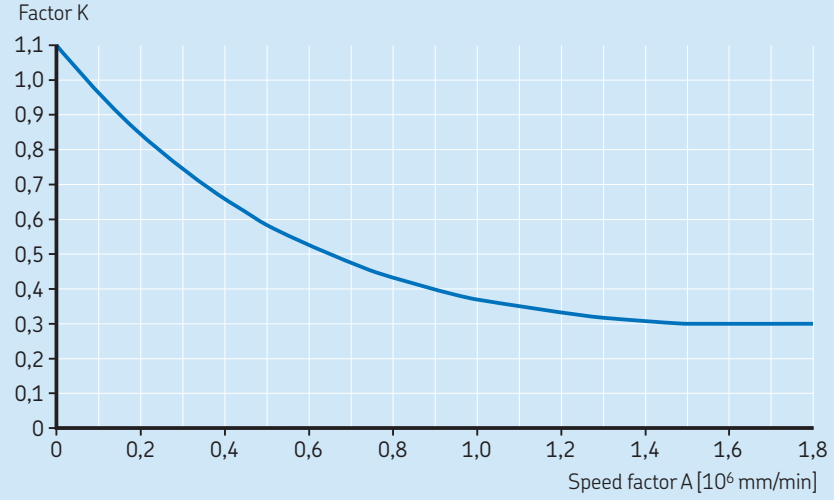

Table 1

Reference grease quantity for initial grease fill estimation

Bearing Bore diameter d	Size	**Reference grease quantity**[1] G_{ref}
mm	–	cm^3
40	**08**	3,1
45	**09**	4,1
50	**10**	4,4
55	**11**	6,1
60	**12**	6,5
65	**13**	6,9
70	**14**	9,2
75	**15**	9,6
80	**16**	12,5

[1] Refers to a 30% filling grade.

Oil lubrication

Where speeds are constantly very high (generally, speed factor A > 1 800 000 mm/min), bearings in the N 10 series should be oil lubricated, as the service life of grease is too short under these conditions and oil provides the added benefit of cooling.

Oil-air lubrication method

In some precision applications, the very high operational speeds and requisite low operating temperatures require an oil-air lubrication system. Oil is supplied to the feed lines at given intervals by a metering unit. The oil coats the inside surface of the feed lines and "creeps" toward the nozzles (→ **fig. 1**), where it is delivered to the bearings. The oil nozzles should be positioned correctly (→ **table 2**) to make sure that the oil is introduced into the contact area between the rollers and raceways and to avoid interference with the cage.

Guidelines for the oil quantity to be supplied to each bearing for very high speed operation can be obtained from

$$Q = \frac{q\,d\,B}{100}$$

where
Q = oil flow rate [mm³/h]
d = bearing bore diameter [mm]
B = bearing width [mm]
q = a factor of 1 to 2

Different bearing types and designs show varying sensitivity to oil quantity change. Roller bearings, which are very sensitive to lubricant quantity, can experience a significant increase in operating temperature. Therefore, SKF recommends testing and verifying the calculated oil flow rate prior to operation in a production environment.

High quality lubricating oils with a viscosity of 40 to 100 mm²/s at 40 °C are typically used, as are oils with EP additives, which are preferable for roller bearings. A filter that prevents particles > 5 µm from reaching the bearings should also be incorporated.

Fig. 1

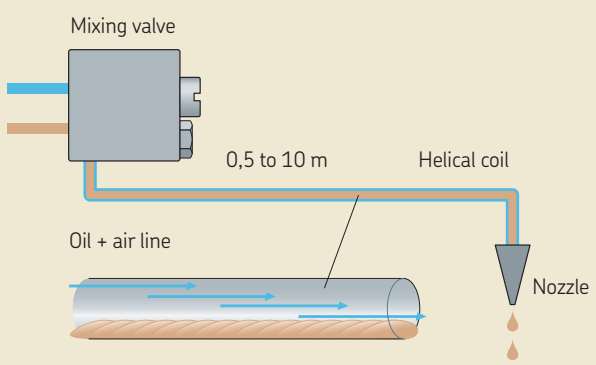

Table 2

Oil nozzle position for oil-air lubrication

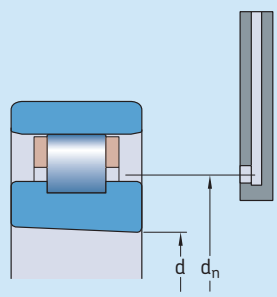

Bearing Bore diameter d	Size	**Oil nozzle position** d_n
mm	–	mm
40	**08**	52,1
45	**09**	57,9
50	**10**	63
55	**11**	70,1
60	**12**	75,2
65	**13**	80,1
70	**14**	87,7
75	**15**	92,7
80	**16**	99,3

Bearing data – general

Boundary dimensions

The boundary dimensions of bearings in the N 10 series are in accordance with ISO 15:2011, Dimension Series 10.

Chamfer dimensions

Minimum values for the chamfer dimensions in the radial direction (r_1, r_3) and the axial direction (r_2, r_4) are provided in the product table. The values for the chamfers on the outer ring are in accordance with ISO 15:2011. The values for the chamfers on the inner ring are smaller and are not standardized.

The appropriate maximum chamfer limits are in accordance with ISO 582:1995.

Tolerances

Bearings in the N 10 series are manufactured, standard, to an SP (special precision) tolerance class (→ **table 1**), which is approximately in accordance with ISO tolerance class 5 for dimensional accuracy and approximately in accordance with ISO tolerance class 4 for running accuracy.

On request, bearings can be supplied in an ultra-precision (UP) tolerance class (→ **table 2**), which is approximately in accordance with ISO tolerance class 4 for dimensional accuracy and better than ISO tolerance class 4 for running accuracy.

Additional tolerances for tapered bores are provided in **table 3**.

The tolerance symbols used in these tables are listed together with their definitions in **table 4**.

Radial internal clearance

Bearings in the N 10 series are manufactured, standard, with C1 radial internal clearance. On request, the bearings can be supplied with a special reduced radial internal clearance (smaller than C1), when a minimum operational clearance or preload after mounting is required.

The bearing rings of individual bearings are matched at the factory and must be kept together. (When packed separately, bearing rings have a serial number.) If bearing rings are swapped, the "new" radial internal clearance in the bearing could fall outside the

Table 1

Class SP tolerances

Inner ring									
d		Δ_{ds} [1]		V_{dp}	Δ_{Bs}		V_{Bs}	K_{ia}	S_d
over	incl.	high	low	max	high	low	max	max	max
mm		µm		µm	µm		µm	µm	µm
30	**50**	0	–8	4	0	–120	5	4	8
50	**80**	0	–9	5	0	–150	6	4	8
Outer ring									
D		Δ_{Ds}		V_{Dp}	Δ_{Cs}, V_{Cs}			K_{ea}	S_D
over	incl.	high	low	max				max	max
mm		µm		µm				µm	µm
50	**80**	0	–9	5	Values are identical to			5	8
80	**120**	0	–10	5	those for the inner ring of			6	9
120	**150**	0	–11	6	the same bearing (Δ_{Bs}, V_{Bs})			7	10

[1] For SP tolerances for tapered bores, refer to **Table 3**.

Table 2

Class UP tolerances

Inner ring									
d		Δ_{ds} [1]		V_{dp}	Δ_{Bs}		V_{Bs}	K_{ia}	S_d
over	incl.	high	low	max	high	low	max	max	max
mm		µm		µm	µm		µm	µm	µm
30	**50**	0	–6	3	0	–100	2	2	3
50	**80**	0	–7	3,5	0	–100	3	2	4
Outer ring									
D		Δ_{Ds}		V_{Dp}	Δ_{Cs}, V_{Cs}			K_{ea}	S_D
over	incl.	high	low	max				max	max
mm		µm		µm				µm	µm
50	**80**	0	–6	3	Values are identical to			3	2
80	**120**	0	–7	4	those for the inner ring of			3	3
120	**150**	0	–8	4	the same bearing (Δ_{Bs}, V_{Bs})			4	3

[1] For UP tolerances for tapered bores, refer to **Table 3**.

specifications and complicate the mounting procedure.

The values for C1 radial internal clearance are listed in **table 5**, on **page 16**. They are in accordance with ISO 5753-1:2009 and valid for unmounted bearings under zero measuring load.

Axial displacement

Bearings in the N 10 series can accommodate thermal elongation of the shaft, within the bearing. This enables the inner and outer rings to be mounted with an interference fit. The permissible axial displacement s from the normal position of one bearing ring in relation to the other is provided in the product table.

Radial stiffness

Radial stiffness depends on the deformation of the bearing under load and can be expressed as the ratio of the load to bearing resilience. However, since there is not a direct linear relationship between bearing resilience and load, constant values for radial

Table 3

Classes SP and UP tolerances for a tapered bore, taper 1:12

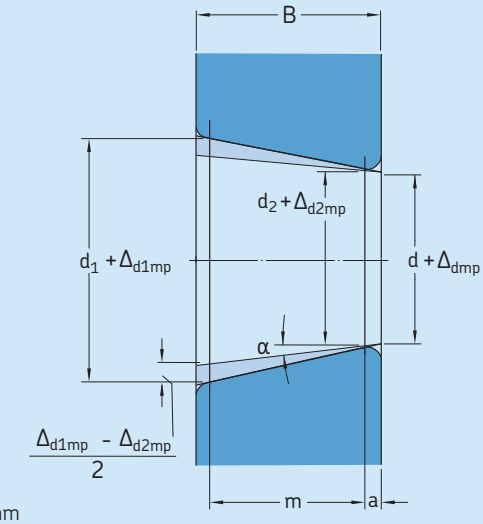

Half angle of taper:
$\alpha = 2° 23' 9{,}4''$

$$\frac{\Delta_{d1mp} - \Delta_{d2mp}}{2}$$

Measuring distance a = 2,5 mm

Bore diameter d		Class SP tolerances					Class UP tolerances				
		Δ_{d2mp}		V_{dp}	$\Delta_{d1mp} - \Delta_{d2mp}$ [1]		Δ_{d2mp}		V_{dp}	$\Delta_{d1mp} - \Delta_{d2mp}$ [1]	
over	incl.	high	low	max	high	low	high	low	max	high	low
mm		µm		µm	µm		µm		µm	µm	
30	**50**	+12	0	4	+4	0	+7	0	3	+3	0
50	**80**	+15	0	5	+5	0	+8	0	3,5	+3	0

[1] $\Delta_{d1mp} - \Delta_{d2mp}$ = angle deviation over the measuring distance m

Table 4

Tolerance symbols

Tolerance symbol	Definition
	Bore diameter
d	Nominal bore diameter
d_s	Single bore diameter
d_{mp}	Mean bore diameter; arithmetical mean of the largest and smallest single bore diameters in one plane
Δ_{ds}	Deviation of a single bore diameter from the nominal ($\Delta_{ds} = d_s - d$)
Δ_{dmp}	Deviation of the mean bore diameter from the nominal ($\Delta_{dmp} = d_{mp} - d$)
Δ_{d1mp}	Deviation of the mean bore diameter at the large end of a tapered bore from the nominal; arithmetical mean of the largest and smallest single bore diameters, measured in one plane in a defined distance from the bearing side face
Δ_{d2mp}	Deviation of the mean bore diameter at the small end of a tapered bore from the nominal; arithmetical mean of the largest and smallest single bore diameters, measured in one plane in a defined distance from the bearing side face
V_{dp}	Bore diameter variation; difference between the largest and smallest single bore diameters in one plane

Tolerance symbol	Definition
	Outside diameter
D	Nominal outside diameter
D_s	Single outside diameter
Δ_{Ds}	Deviation of a single outside diameter from the nominal ($\Delta_{Ds} = D_s - D$)
V_{Dp}	Outside diameter variation; difference between the largest and smallest single outside diameters in one plane
	Width
B, C	Nominal width of inner ring and outer ring, respectively
B_s, C_s	Single width of inner ring and outer ring, respectively
Δ_{Bs}, Δ_{Cs}	Deviation of single inner ring width or single outer ring width from the nominal ($\Delta_{Bs} = B_s - B$; $\Delta_{Cs} = C_s - C$)
V_{Bs}, V_{Cs}	Ring width variation; difference between the largest and smallest single widths of inner ring and of outer ring, respectively
	Running accuracy
K_{ia}, K_{ea}	Radial runout of inner ring and outer ring, respectively, of assembled bearing
S_d	Side face runout with reference to bore (of inner ring)
S_D	Outside inclination variation; variation in inclination of outside cylindrical surface to outer ring side face

stiffness cannot be quoted. Exact values of radial stiffness, for bearings in the N 10 series, for a given load can be calculated using advanced computer methods, but guideline values are listed in **table 6**. These values apply to mounted bearings with zero clearance under static conditions and subjected to moderate loads.

Equivalent loads

The equivalent dynamic bearing load can be calculated using

$P = F_r$

The equivalent static bearing load can be calculated using

$P_0 = F_r$

where
P = equivalent dynamic bearing load [kN]
P_0 = equivalent static bearing load [kN]
F_r = radial component of the load [kN]

Attainable speeds

The attainable speeds listed in the product table should be regarded as guideline values. They are valid under the following conditions:

- The bearings have small operational clearance (2 to 3 µm).
- Housing and shaft seats and abutments meet the accuracy requirements for precision applications.

The speed ratings must be reduced when:

- operational clearance is smaller than 2 µm
- preload is set
- the housing and shaft seats and abutments do not meet accuracy requirements

The values provided for oil lubrication apply to the oil-air lubrication method and should be reduced if other oil lubrication methods are used. The values provided for grease lubrication are maximum values that can be attained with good lubricating grease that has a low consistency and low viscosity.

Cage material

Bearings in the N 10 series have a cage made of carbon fibre reinforced polyetheretherketone (PEEK) (→ **fig. 1**) that can withstand temperatures up to 150 °C.

The technical specifications of carbon fibre reinforced PEEK are provided in **table 7**.

Materials and heat treatment

The rings and rollers of all-steel bearings in the N 10 series are made from SKF Grade 3 steel, in accordance with ISO 683-17:1999.

Rollers of hybrid bearings are made of bearing grade silicon nitride Si_3N_4.

The bearings undergo a special heat treatment to achieve a good balance between hardness and dimensional stability. The hardness of the rings and rolling elements is optimized for wear-resistance and the bearing rings are heat stabilized to accommodate temperatures up to 150 °C.

Table 5

Radial internal clearance

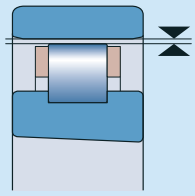

Bearing Bore diameter d	Size	Radial internal clearance C1 min	max
mm	–	µm	
40	**08**	15	25
45	**09**	17	30
50	**10**	17	30
55	**11**	20	35
60	**12**	20	35
65	**13**	20	35
70	**14**	25	40
75	**15**	25	40
80	**16**	25	40

Table 6

Static radial stiffness

Bearing Bore diameter d	Size	Static radial stiffness of all-steel bearings	of hybrid bearings
mm	–	N/µm	
40	08	155	172
45	09	176	196
50	10	194	215
55	11	229	254
60	12	250	277
65	13	271	301
70	14	305	339
75	15	303	337
80	16	347	385

Table 7

Technical specifications of carbon fibre reinforced polyetheretherketone (PEEK)

Property	Specification
Density [g/cm³]	1,41
Thermal linear expansion coefficient [10^{-6} /K]	25
Elasticity traction modulus [MPa]	7 700
Melting point [°C]	340

Packaging

SKF super-precision bearings are distributed in new SKF illustrated boxes (→ **fig. 2**). Bearings in the N 10 series are usually supplied in a single box. However, if the bearing rings are packed separately, they are identified by a serial number and must be kept together.

Designation system

The designations for SKF bearings in the N 10 series are provided in **table 8** together with their definitions.

Fig. 1

Fig. 2

Table 8

Designation system for SKF high-speed super-precision single row cylindrical roller bearings in the N 10 series

Example: N 1016 KPHA/HC5SP	N	10	16	K	PHA	/	HC5	SP

Bearing design	
N	Single row cylindrical roller bearing with integral flanges on the inner ring
Dimension Series	
10	In accordance with ISO Dimension Series 10
Bearing size	
08	(x5) 40 mm bore diameter
to	
16	(x5) 80 mm bore diameter
Bore shape	
K	Tapered bore (taper 1:12)
Cage material and design	
PHA	Carbon fibre reinforced polyetheretherketone (PEEK), outer ring centred, high-speed design
Rolling elements	
–	Carbon chromium steel (no designation suffix)
HC5	Bearing grade silicon nitride Si_3N_4 (hybrid bearings)
Tolerance class	
SP	Dimensional accuracy approximately in accordance with ISO tolerance class 5 and running accuracy approximately in accordance with ISO tolerance class 4
UP	Dimensional accuracy approximately in accordance with ISO tolerance class 4 and running accuracy better than ISO tolerance class 4

Super-precision single row cylindrical roller bearings
d **40 – 80** mm

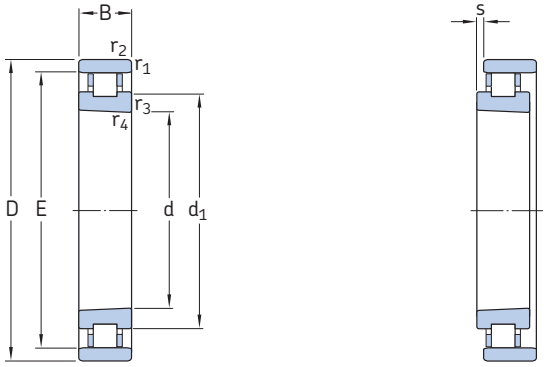

Principal dimensions			Basic load ratings dynamic	static	Fatigue load limit	Attainable speeds when lubricating with grease	oil-air	Mass	Designation
d	D	B	C	C_0	P_u				
mm			kN		kN	r/min		kg	–
40	68	15	23,3	25	2,9	30 000	36 000	0,190	**N 1008 KPHA/SP**
	68	15	23,3	25	2,9	32 000	38 000	0,172	**N 1008 KPHA/HC5SP**
45	75	16	27	30	3,45	28 000	34 000	0,240	**N 1009 KPHA/SP**
	75	16	27	30	3,45	30 000	36 000	0,202	**N 1009 KPHA/HC5SP**
50	80	16	28,6	33,5	3,8	26 000	30 000	0,260	**N 1010 KPHA/SP**
	80	16	28,6	33,5	3,8	28 000	32 000	0,217	**N 1010 KPHA/HC5SP**
55	90	18	37,4	44	5,2	22 000	28 000	0,380	**N 1011 KPHA/SP**
	90	18	37,4	44	5,2	24 000	30 000	0,316	**N 1011 KPHA/HC5SP**
60	95	18	40,2	49	5,85	20 000	26 000	0,400	**N 1012 KPHA/SP**
	95	18	40,2	49	5,85	22 000	28 000	0,330	**N 1012 KPHA/HC5SP**
65	100	18	42,9	54	6,3	20 000	24 000	0,430	**N 1013 KPHA/SP**
	100	18	42,9	54	6,3	22 000	26 000	0,354	**N 1013 KPHA/HC5SP**
70	110	20	53,9	69,5	8	18 000	22 000	0,610	**N 1014 KPHA/SP**
	110	20	53,9	69,5	8	20 000	24 000	0,501	**N 1014 KPHA/HC5SP**
75	115	20	52,8	69,5	8,15	17 000	20 000	0,640	**N 1015 KPHA/SP**
	115	20	52,8	69,5	8,15	19 000	22 000	0,531	**N 1015 KPHA/HC5SP**
80	125	22	66	86,5	10,2	16 000	19 000	0,880	**N 1016 KPHA/SP**
	125	22	66	86,5	10,2	18 000	20 000	0,731	**N 1016 KPHA/HC5SP**

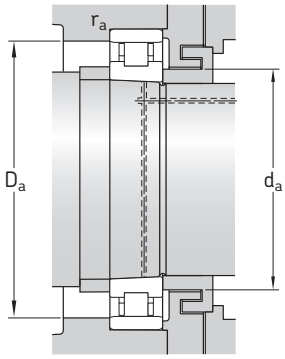

Dimensions						Abutment and fillet dimensions				
d	d_1 ~	E ~	$r_{1,2}$ min	$r_{3,4}$ min	s[1]	d_a min	d_a max	D_a min	D_a max	r_a max
mm						mm				
40	50,6	61	1	0,6	1,5	45	59	62	63	1
	50,6	61	1	0,6	1,5	45	59	62	63	1
45	56,3	67,5	1	0,6	1,5	50	65	69	70	1
	56,3	67,5	1	0,6	1,5	50	65	69	70	1
50	61,3	72,5	1	0,6	1,5	55	70	74	75	1
	61,3	72,5	1	0,6	1,5	55	70	74	75	1
55	68,2	81	1,1	0,6	1,5	61,5	79	82	83,5	1
	68,2	81	1,1	0,6	1,5	61,5	79	82	83,5	1
60	73,3	86,1	1,1	0,6	1,5	66,5	84	87	88,5	1
	73,3	86,1	1,1	0,6	1,5	66,5	84	87	88,5	1
65	78,2	91	1,1	0,6	1,5	71,5	89	92	93,5	1
	78,2	91	1,1	0,6	1,5	71,5	89	92	93,5	1
70	85,6	100	1,1	0,6	2	76,5	98	101	103,5	1
	85,6	100	1,1	0,6	2	76,5	98	101	103,5	1
75	90,6	105	1,1	0,6	2	81,5	102	106	108,5	1
	90,6	105	1,1	0,6	2	81,5	102	106	108,5	1
80	97	113	1,1	0,6	2	86,5	110	114	118,5	1
	97	113	1,1	0,6	2	86,5	110	114	118,5	1

[1] Permissible axial displacement from the normal position of one bearing ring in relation to the other.

Setting the highest standard for precision bearings

SKF has developed and is continuing to develop a new, improved generation of super-precision bearings. The new assortment delivers improved accuracy and extended bearing service life when compared to previous designs.

Super-precision angular contact ball bearings

Bearings in the 718 *(SEA)* series

Bearings in the 718 *(SEA)* series provide optimum performance in applications where a low cross section and high degree of rigidity, speed and superior accuracy are critical design parameters. They are particularly suitable for machine tool applications, multi-spindle drilling heads, robotic arms, measuring devices, racing car wheels and other precision applications. The standard assortment accommodates shaft diameters ranging from 10 to 160 mm.

Bearings in the 719 .. D *(SEB)* and 70 .. D *(EX)* series

For applications where a high load carrying capacity is an additional operational requirement, SKF offers high-capacity bearings in the 719 .. D *(SEB)* and 70 .. D *(EX)* series. The ability of the new design super-precision bearings in these two series to accommodate heavy loads in applications where radial space is often limited, makes them an excellent choice for demanding applications. Open bearings in the 719 .. D *(SEB)* series accommodate shaft diameters ranging from 10 to 360 mm; sealed bearings from 10 to 150 mm.

Open bearings in the 70 .. D *(EX)* series accommodate shaft diameters ranging from 6 to 240 mm; sealed bearings from 10 to 150 mm.

Bearings in the 72 .. D *(E 200)* series

High-capacity bearings in the 72 .. D *(E 200)* series offer solutions to many bearing arrangement challenges. Their ability, among others, to provide a high degree of rigidity and accommodate heavy loads at relatively high speeds, is beneficial for a variety of applications. The extended range of bearings in this series now accommodates shaft diameters ranging from 7 to 140 mm. And, there is also a relubrication-free, sealed variant, available on request.

Bearings in the S719 .. B *(HB .. /S)* and S70 .. B *(HX .. /S)* series

High-speed sealed bearings in the S719 .. B *(HB .. /S)* and S70 .. B *(HX .. /S)* series can virtually eliminate the problem of premature bearing failures resulting from contamination. The standard assortment accommodates shaft diameters ranging from 30 to 120 mm. These relubrication-free bearings are particularly suitable for metal cutting and woodworking machines. The bearings are also available in an open variant.

Bearings in the 719 .. E *(VEB)* and 70 .. E *(VEX)* series

Compared to high-speed B design bearings, high-speed E design bearings have a higher speed capability and can accommodate heavier loads. This desirable combination makes these bearings an excellent choice for demanding applications.

Open bearings in the 719 .. E *(VEB)* series accommodate shaft diameters ranging from 8 to 120 mm; sealed bearings from 20 to 120 mm.

Open bearings in the 70 .. E *(VEX)* series accommodate shaft diameters ranging from 6 to 120 mm; sealed bearings from 10 to 120 mm.

Bearings made from NitroMax steel

In extremely demanding applications such as high-speed machining centres and milling machines, bearings are frequently subjected to difficult operating conditions such as very high speeds, thin-film lubrication conditions, and contaminated and corrosive environments. To enable longer bearing service life and reduce the costs associated with downtime, SKF has developed a superior high-nitrogen steel.

The SKF assortment of super-precision angular contact ball bearings made from NitroMax steel have ceramic (bearing grade silicon nitride) rolling elements as standard.

Super-precision cylindrical roller bearings

SKF produces super-precision single row and double row cylindrical roller bearings. The characteristic features of these bearings are a low cross sectional height, high load carrying capacity, high rigidity and high-speed capability. They are therefore particularly well suited for machine tool spindles where the bearing arrangement must accommodate heavy radial loads and high speeds, while providing a high degree of stiffness.

Single row cylindrical roller bearings are produced in the N 10 series as basic design bearings and as high-speed design bearings. High-speed single row cylindrical roller bearings in the N 10 series are available with a tapered bore only and for shaft diameters ranging from 40 to 80 mm. Compared to previous high-speed design, they can accommodate a speed increase of up to 30% in grease lubricated applications and up to 15% in oil-air lubricated applications.

Double row cylindrical roller bearings are produced as standard in the NN design and NNU design.

Super-precision double direction angular contact thrust ball bearings

Double direction angular contact bearings, as their name implies, were developed by SKF to axially locate machine tool spindles in both directions.

The new optimized design of super-precision bearings in the BTW series consists of a set of two single row angular contact thrust ball bearings, arranged back-to-back. This configuration enables the bearings to accommodate axial loads in both directions while providing a high degree of system rigidity. These bearings can accommodate higher speeds compared to bearings in the former 2344*(00)* series. The bearings are available for shaft diameters ranging from 35 to 200 mm.

The redesigned high-speed BTM series accommodate higher speeds, anywhere from 6% to 12% depending on the size; minimize heat generation, even at higher speeds; provide high load carrying capacity and maintain a high degree of system rigidity. The range of BTM bearings series has been expanded to accommodate shaft diameters from 60 to 180 mm.

Super-precision angular contact thrust ball bearings for screw drives

Single direction angular contact thrust ball bearings in the BSA and BSD *(BS)* series are available for shaft diameters ranging from 12 to 75 mm. These bearings are characterized by superior axial stiffness and high axial load carrying capacity.

Double direction angular contact thrust ball bearings in the BEAS series have been developed for machine tool applications where space is tight and easy mounting is required. The bearings are available for shaft diameters ranging from 8 to 30 mm. Bearings in the BEAM series, which can accommodate shaft diameters ranging from 12 to 60 mm, can be bolt-mounted to an associated component.

Cartridge units are another solution for simple and quick mounting. Units in the FBSA *(BSDU and BSQU)* series incorporate SKF single direction angular contact thrust ball bearings and can accommodate shaft diameters ranging from 20 to 60 mm.

Super-precision axial-radial cylindrical roller bearings

SKF axial-radial cylindrical roller bearings are suitable for arrangements that have simultaneously acting (radial and axial) loads as well as moment loads.

Their internal design, together with close tolerance manufacturing processes, enable these bearings to attain better than P4 running accuracy.

Axial-radial cylindrical roller bearings are commonly used to support rotating tables, indexing tables and milling heads.

SKF – the knowledge engineering company

From one simple but inspired solution to a misalignment problem in a textile mill in Sweden, and fifteen employees in 1907, SKF has grown to become a global industrial knowledge leader.
Over the years, we have built on our expertise in bearings, extending it to seals, mechatronics, services and lubrication systems. Our knowledge network includes 46 000 employees, 15 000 distributor partners, offices in more than 130 countries, and a growing number of SKF Solution Factory sites around the world.

Research and development

We have hands-on experience in over forty industries based on our employees' knowledge of real life conditions. In addition, our world-leading experts and university partners pioneer advanced theoretical research and development in areas including tribology, condition monitoring, asset management and bearing life theory. Our ongoing commitment to research and development helps us keep our customers at the forefront of their industries.

Meeting the toughest challenges

Our network of knowledge and experience, along with our understanding of how our core technologies can be combined, helps us create innovative solutions that meet the toughest of challenges. We work closely with our customers throughout the asset life cycle, helping them to profitably and responsibly grow their businesses.

Working for a sustainable future

Since 2005, SKF has worked to reduce the negative environmental impact from our operations and those of our suppliers. Our continuing technology development resulted in the introduction of the SKF BeyondZero portfolio of products and services which improve efficiency and reduce energy losses, as well as enable new technologies harnessing wind, solar and ocean power. This combined approach helps reduce the environmental impact both in our operations and our customers' operations.

SKF Solution Factory makes SKF knowledge and manufacturing expertise available locally to provide unique solutions and services to our customers.

Working with SKF IT and logistics systems and application experts, SKF Authorized Distributors deliver a valuable mix of product and application knowledge to customers worldwide.

Our knowledge – your success

SKF Life Cycle Management is how we combine our technology platforms and advanced services, and apply them at each stage of the asset life cycle, to help our customers to be more successful, sustainable and profitable.

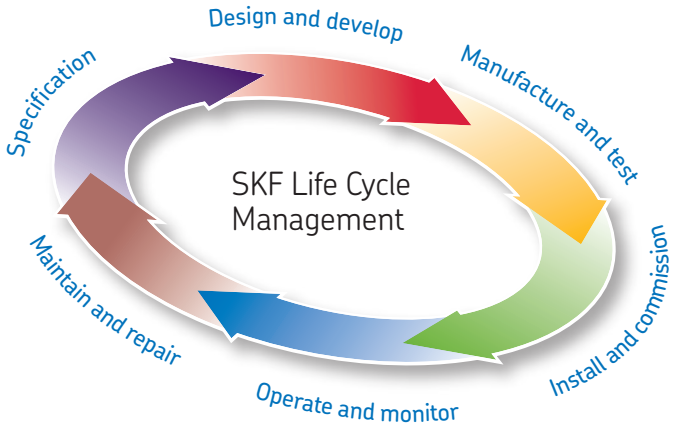

D

Working closely with you

Our objective is to help our customers improve productivity, minimize maintenance, achieve higher energy and resource efficiency, and optimize designs for long service life and reliability.

Innovative solutions

Whether the application is linear or rotary or a combination, SKF engineers can work with you at each stage of the asset life cycle to improve machine performance by looking at the entire application. This approach doesn't just focus on individual components like bearings or seals. It looks at the whole application to see how each component interacts with each other.

Design optimization and verification

SKF can work with you to optimize current or new designs with proprietary 3-D modelling software that can also be used as a virtual test rig to confirm the integrity of the design.

Bearings
SKF is the world leader in the design, development and manufacture of high performance rolling bearings, plain bearings, bearing units and housings.

Machinery maintenance
Condition monitoring technologies and maintenance services from SKF can help minimize unplanned downtime, improve operational efficiency and reduce maintenance costs.

Sealing solutions
SKF offers standard seals and custom engineered sealing solutions to increase uptime, improve machine reliability, reduce friction and power losses, and extend lubricant life.

Mechatronics
SKF fly-by-wire systems for aircraft and drive-by-wire systems for off-road, agricultural and forklift applications replace heavy, grease or oil consuming mechanical and hydraulic systems.

Lubrication solutions
From specialized lubricants to state-of-the-art lubrication systems and lubrication management services, lubrication solutions from SKF can help to reduce lubrication related downtime and lubricant consumption.

Actuation and motion control
With a wide assortment of products – from actuators and ball screws to profile rail guides – SKF can work with you to solve your most pressing linear system challenges.

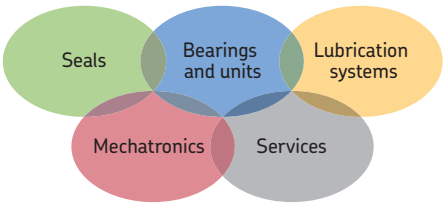

The Power of Knowledge Engineering

Drawing on five areas of competence and application-specific expertise amassed over more than 100 years, SKF brings innovative solutions to OEMs and production facilities in every major industry worldwide. These five competence areas include bearings and units, seals, lubrication systems, mechatronics (combining mechanics and electronics into intelligent systems), and a wide range of services, from 3-D computer modelling to advanced condition monitoring and reliability and asset management systems. A global presence provides SKF customers uniform quality standards and worldwide product availability.

PUB BU/P9 07016/2 EN · November 2012

This publication complements information about SKF bearings in the N 10 series in the SKF publication *High-precision bearings* (Publication No. 6002).